8-bit Enhanced USB MCU CH558

Datasheet

Version: 1.4

http://wch-ic.com

1. Overview

CH558 is an enhanced E8051 MCU compatible with MCS51 instruction set. 79% of its instructions are single-byte single-cycle instructions, and the average instruction speed is 8 to 15 times faster than that of the standard MCS51.

CH558 supports up to 56MHz system clock, built-in 40K Flash-ROM, 256-byte on-chip iRAM and 4K bytes on-chip xRAM. xRAM supports DMA mode.

CH558 has a built-in ADC converter, 4 timers/PWM, 2 UARTs, SPI, USB device controller and full-speed transceiver and other function modules.

Here is CH558 internal block diagram, for reference only.

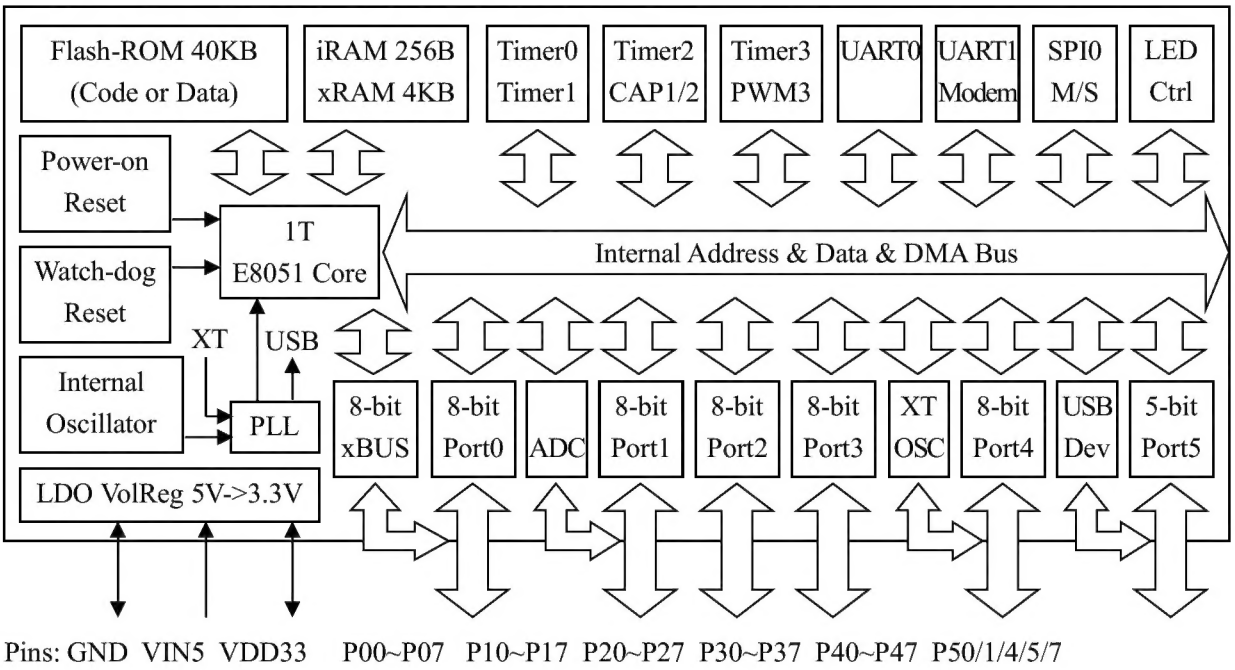

2. Features

- Core: Enhanced E8051 core, compatible with MCS51 instruction set, 79% of its instructions are single-byte single-cycle instructions, and the average instruction speed is 8 to 15 times faster than that of the standard MCS51, with special XRAM data fast copy instruction, and dual DPTR pointer.
- ROM: Non-volatile 40KB Flash-ROM, which supports 100K writing cycles, it can be divided into 3 pieces: 32KB for program memory, 5KB for data-flash and 3KB for BootLoader/ISP code.
- RAM: 256-byte on-chip iRAM, for fast data cache or stack pointer. 4KB on-chip xRAM, for mass data or DMA operation; support off-chip SRAM extending up to 32KB.
- USB: Built-in USB controller and USB transceiver, supports USB-Device mode, supports USB 2.0 full-speed (12Mbps) and low-speed (1.5Mbps). Maximum support 64-byte packet, built-in FIFO, and support

DMA mode.

- Timer: 4 timers, T0/T1/T2 are standard MCS51 timers, T2 is extended to support 2 captures; TMR3 has built-in 8-level FIFO, supports DMA, supports signal capturing and 16-bit PWM output.
- UART: 2 UARTs, UART0 is a standard MCS51 UART; UART1 is compatible with 16C550, with built-in 8-level FIFO, supports Modem signals, supports RS485 half-duplex mode, and supports local address presetting for auto-matching or multi-device communication.
- SPI: SPI controller with built-in FIFO, high speed rate up to Fsys/2. It supports simplex multiplexing of serial data input and output, and supports Master/Slave mode.
- ADC: 8-channel 10-bit or 11-bit A/D converter, built-in 2-level FIFO, supports DMA, sampling rate up to 1MSPS, and supports 2 channels auto-switching detection.
- LED-CTRL: LED control card interface, built-in 4-level FIFO, supports DMA mode, and 1/2/4-channel data interface, high speed rate up to Fsys/2.
- XBUS: 8-bit parallel external bus, compatible with standard MCS51 bus, used to connect off-chip SRAM memory or other peripherals, supports direct 15-bit address or ALE multiplexed low 8-bit address, and supports 4 bus speeds.
- GPIO: Support up to 45 GPIO pins (including XI/XO, RST and USB signal pins), 3.3V voltage output, and all support 5V-tolerant input except P1.0-P1.7, XI, XO or RST.
- Interrupt: Support 13 interrupt sources, including 6 interrupts compatible with the standard MCS51 (INT0, T0, INT1, T1, UART0, T2), and 7 extended interrupts (SPI0, TMR3, USB, ADC, UART1, GPIO, WDOG). GPIO interrupt can be selected from 7 pins.
- Watch-Dog: 8-bit configure presetting watchdog timer WDOG, support timer interrupt.
- Reset: Support 4 reset sources, built-in power on reset, supports software reset and watchdog overflow reset, configurable external input reset.
- Clock: Built-in 12MHz clock, support external crystals through alternate GPIO pins, built-in PLL for USB clock and Fsys.
- Power: Built-in 5V to 3.3V LDO; 3.3V working voltage internal, support 5V and 3.3V voltage input. Support low power sleep mode, support USB, UART0, UART1, SPI0 and some GPIOs wake-up.
- The chip has a built-in unique ID number and supports ID number and checksum.

3. Package

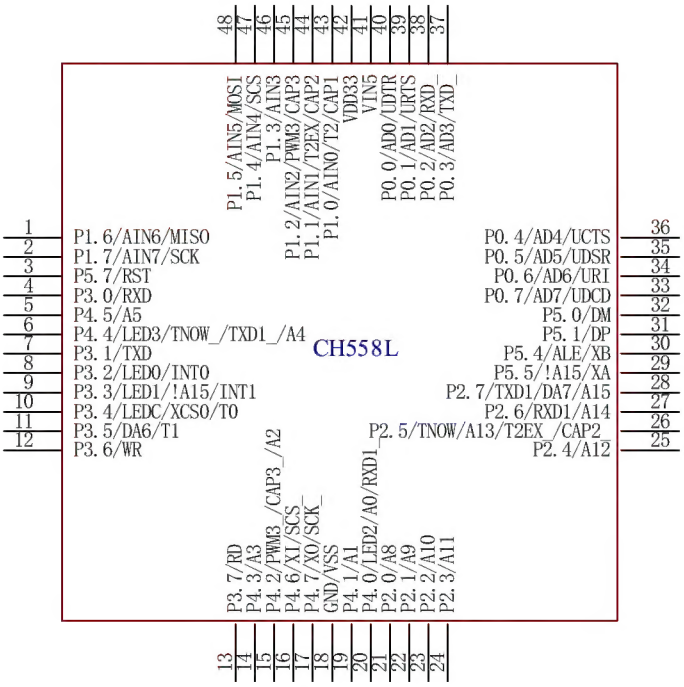

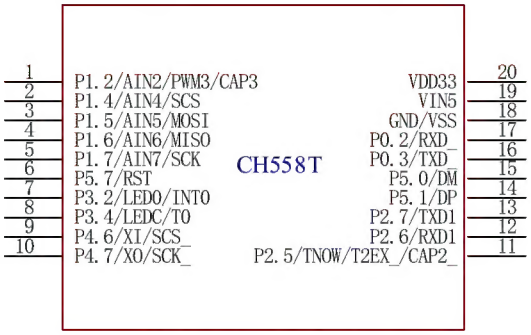

Package	Size		Pin spacing		Package description	Order model
LQFP-48	7*7mm		0.5mm	19.7mil	Low-profile Quad Flat Package	CH558L
SSOP-20	5.30mm	209mil	0.65mm	25mil	Shrink Small-Outline Package	CH558T

4. Pin Definitions

Pin No.		Pin Name	Alternate function (Left preferential)	Description
SSOP20	LQFP48			
19	41	VIN5	V5	5V external power input of internal 5V->3.3V LDO, An external 0.1uF decoupling capacitor is required.
20	42	VDD33	VDD/VCC	Internal voltage regulator output and internal 3.3V working power input, When supply voltage is less than 3.6V, connect VIN5 to input the external power supply. When supply voltage is greater than 3.6V, an external 3.3uF decoupling capacitor is required.
18	18	GND	VSS	Ground.
-	40	P0.0	AD0/UDTR	P0 port: 8-bit open-drain bidirectional port by default, can be configured to quasi-bidirectional port by configuring the P0_PU register to enable the internal pull-up resistor. P0 will automatically switch to push-pull output modes temporarily when accessing external bus, as bidirectional data buses AD0-AD7; or output the lower 8 bits of address as needed when accessing external bus in address multiplexing mode. UDTR, URTS: UART1 modem signal outputs. UCTS, UDSR, URI, UDCD: UART1 modem signal inputs. RXD_, TXD_: RXD, TXD pin mapping.
-	39	P0.1	AD1/URTS	
17	38	P0.2	AD2/RXD_	
16	37	P0.3	AD3/TXD_	
-	36	P0.4	AD4/UCTS	
-	35	P0.5	AD5/UDSR	

-	34	P0.6	AD6/URI	
-	33	P0.7	AD7/UDCD	
-	43	P1.0	AIN0/T2/CAP1	AIN0 ~ AIN7: 8-channel ADC analog signal input. T2: Timer/counter2 external count input/clock output. T2EX: Timer/counter2 reload/capture input. CAP1, CAP2: Timer/counter2 capture input 1, 2. CAP3/PWM3: Timer/counter3 capture input/PWM output. SCS, MOSI, MISO, SCK: SPI0 interfaces, SCS is chip select input. MOSI is master output/slave input. MISO is master input/slave output. SCK is serial clock.
-	44	P1.1	AIN1/T2EX/CAP2	
1	45	P1.2	AIN2/PWM3/CAP3	
-	46	P1.3	AIN3	
2	47	P1.4	AIN4/SCS	
3	48	P1.5	AIN5/MOSI	
4	1	P1.6	AIN6/MISO	
5	2	P1.7	AIN7/SCK	
-	21	P2.0	A8	P2 will automatically switch to push-pull output modes temporarily when accessing external bus, and output the higher 8 bits A8-A15 of address as needed. TNOW: UART1 transmitting indicating. T2EX_/CAP2_: T2EX/CAP2 pin mapping. RXD1, TXD1: UART1 serial data input, serial data output. DA7: Address A7 output when accessing external bus in direct-address mode.
-	22	P2.1	A9	
-	23	P2.2	A10	
-	24	P2.3	A11	
-	25	P2.4	A12	
11	26	P2.5	TNOW/A13 /T2EX_/CAP2_	
12	27	P2.6	RXD1/A14	
13	28	P2.7	TXD1/DA7/A15	
-	4	P3.0	RXD	RXD, TXD: UART0 serial data input, serial data output. INT0, INT1: External interrupt 0, external interrupt 1 input. LED0, LED1, LEDC: LED data0, data1, clock output. !A15: External parallel bus address A15 inverted output, for chip selection. T0, T1: Timer0, timer1 external input. XCS0: Chip selection output of external bus address from 4000h to 7FFFh. DA6: Address A6 output when accessing external bus in direct-address mode. WR, RD: External bus write signal, read signal.
-	7	P3.1	TXD	
7	8	P3.2	LED0/INT0	
-	9	P3.3	LED1/!A15/INT1	
8	10	P3.4	LEDC/XCS0/T0	
-	11	P3.5	DA6/T1	
-	12	P3.6	WR	
-	13	P3.7	RD	
-	20	P4.0	LED2/A0/RXD1_	A0 ～ A5: Low 6-bit address output A0 ～ A5 when accessing external bus in direct-address mode. LED2, LED3: LED data2, data3 output. RXD1_, TNOW_/TXD1_: RXD1, TNOW/TXD1 pin mapping. PWM3_/CAP3_: PWM3/CAP3 pin mapping. XI, XO: External crystal oscillation input, inverted output. SCS_, SCK_: SPI0 SCS, SCK pin mapping.
-	19	P4.1	A1	
-	15	P4.2	PWM3_/CAP3_/A2	
-	14	P4.3	A3	
-	6	P4.4	LED3/TNOW_/TXD1_/A4	
-	5	P4.5	A5	
9	16	P4.6	XI/SCS_	
10	17	P4.7	X0/SCK_	
15	32	P5.0	DM	DM, DP: USB device D-, D+ signals.
14	31	P5.1	DP	
-	30	P5.4	ALE/XB	XB, XA: iRS485 B/inverted and A/in-phase signals. ALE: Address latch signal output in address multiplexing mode. !A15: External bus address A15 inverted output, for chip selection.
-	29	P5.5	!A15/XA	

6	3	P5.7	RST	External reset input, built-in pull-down resistor.

5. Special Function Register (SFR)

Abbreviations and descriptions in this datasheet:

Abbreviation	Description
RO	Software can only read these bits.
WO	Software can only write to this bit. The read value is invalid.
RW	Software can read and write to these bits.
h	End with it to indicate a hexadecimal number
b	End with it to indicate a binary number

5.1 SFR Introduction and Address Distribution

CH558 controls, manages the device, and sets the working mode with special function registers (SFR and xSFR).

SFRs use address from 80h to FFh of internal data memory, and can only be accessed by direct-address instructions. Some addresses support bit addressing such as x0h and x8h, to avoid modifying the values of other bits when accessing a specific bit. Other registers with the addresses that are not the multiple of 8 can only be accessed by bytes.

Some SFRs can be written only in safe mode, and are read-only in unsafe mode, such as: GLOBAL_CFG, PLL_CFG, CLOCK_CFG, SLEEP_CTRL, WAKE_CTRL.

Some SFRs have one or more names, such as: SPI0_CK_SE/SPI0_S_PRE, P5_PIN/P4_CFG.

Some addresses may correspond to multiple independent SFRs, such as: TL2/T2CAP1L, TH2/T2CAP1H, SAFE_MOD/CHIP_ID, T3_COUNT_L/T3_CK_SE_L, T3_COUNT_H/T3_CK_SE_H, SER1_FIFO/SER1_RBR/SER1_THR/SER1_DLL, SER1_IER/SER1_DLM, SER1_IIR/SER1_FCR, SER1_ADDR/SER1_DIV, ROM_CTRL/ROM_STATUS.

xSFRs occupy address from 2440h to 298Fh of the external data memory xdata, or 40H to 8Fh of pdata. xSFRs can only be accessed by bytes by indirect addressing through the MOVX instruction, it is based on the DPTR pointer by default, but you can also use faster R0 or R1 as the pdata type pointer to access xSFR named pU* and pLED_* after bXIR_XSFR is set to 1.

Some addresses correspond to multiple independent xSFRs, such as: LED_DATA/LED_FIFO_CN.

CH558 contains all the standard registers of 8051, and adds some other device control registers. See the table below for the specific SFRs.

Table 5.1 Table of special function registers

SFR	0, 8	1, 9	2, A	3, B	4, C	5, D	6, E	7, F
0xF8	SPI0_STAT	SPI0_DATA	SPI0_CTRL	SPI0_CK_SE SPI0_S_PRE	SPI0_SETUP	XBUS_SPEED	RESET_KEEP	WDOG_COUNT
0xF0	B	ADC_STAT	ADC_CTRL	ADC_CHANN	ADC_FIFO_L	ADC_FIFO_H	ADC_SETUP	ADC_EX_SW
0xE8	IE_EX	IP_EX	SLEEP_CTRL	WAKE_CTRL	ADC_DMA_AL	ADC_DMA_AH	ADC_DMA_CN	ADC_CK_SE
0xE0	ACC	USB_INT_EN	USB_CTRL	USB_DEV_AD	UDEV_CTRL		USB_DMA_AL	USB_DMA_AH
0xD8	USB_INT_FG	USB_INT_ST	USB_MIS_ST		UEP0_CTRL	UEP0_T_LEN	UEP4_CTRL	UEP4_T_LEN
0xD0	PSW	USB_RX_LEN	UEP1_CTRL	UEP1_T_LEN	UEP2_CTRL	UEP2_T_LEN	UEP3_CTRL	UEP3_T_LEN

0xC8	T2CON	T2MOD	RCAP2L	RCAP2H	TL2 T2CAP1L	TH2 T2CAP1H	PIN_FUNC	GPIO_IE
0xC0	P4_OUT	P4_IN	P4_DIR	P4_PU	P0_DIR	P0_PU	PORT_CFG	P5_PIN P4_CFG
0xB8	IP	P1_IE	P1_DIR	P1_PU	P2_DIR	P2_PU	P3_DIR	P3_PU
0xB0	P3	GLOBAL_CFG	PLL_CFG	CLOCK_CFG				
0xA8	IE	T3_STAT	T3_CTRL	T3_DMA_CN	T3_DMA_AL	T3_DMA_AH	T3_FIFO_L	T3_FIFO_H
0xA0	P2	SAFE_MOD CHIP_ID	XBUS_AUX	T3_SETUP	T3_COUNT_L T3_CK_SE_L	T3_COUNT_H T3_CK_SE_H	T3_END_L	T3_END_H
0x98	SCON	SBUF	SER1_FIFO SER1_DLL					
0x90	P1	SER1_IER SER1_DLM	SER1_IIR SER1_FCR	SER1_LCR	SER1_MCR	SER1_LSR	SER1_MSR	SER1_ADDR SER1_DIV
0x88	TCON	TMOD	TL0	TL1	TH0	TH1	ROM_DATA_L	ROM_DATA_H
0x80	P0	SP	DPL	DPH	ROM_ADDR_L	ROM_ADDR_H	ROM_CTRL/ ROM_STATUS	PCON

Notes: (1) Those in red text can be accessed by bits;

(2) The following table shows the corresponding description of different color boxes.

	Register address
	SPI0 register
	ADC register
	USB register
	Timer/counter2 register
	Port setting register
	UART1 register
	Timer/counter 0 and 1 register
	Flash-ROM register

5.2 SFR Classification and Reset Value

Figure 5.2 Description and reset value of SFR and xSFR

Function	Name	Address	Description	Reset value
System setting registers	B	F0h	B register	0000 0000b
	ACC	E0h	Accumulator	0000 0000b
	PSW	D0h	Program status register	0000 0000b
	GLOBAL_CFG	B1h	Global configuration register (Bootloader)	1010 0000b
			Global configuration register (application)	1000 0000b
	CHIP_ID	A1h	Chip ID (read-only)	0101 1000b
	SAFE_MOD	A1h	Safe mode control register (write only)	0000 0000b
	DPH	83h	Data pointer high	0000 0000b
	DPL	82h	Data pointer low	0000 0000b
	DPTR	82h	16-bit SFR consists of DPL and DPH	0000h
	SP	81h	Stack pointer	0000 0111b
Clock, sleep and power supply control registers	WDOG_COUNT	FFh	Watchdog count register	0000 0000b
	RESET_KEEP	FEh	Value keeper during reset (power on reset)	0000 0000b
	WAKE_CTRL	EBh	Wake-up control register	0000 0000b
	SLEEP_CTRL	EAh	Sleep control register	0000 0000b
	CLOCK_CFG	B3h	System clock configuration register	1001 1000b
	PLL_CFG	B2h	PLL clock configuration register	1101 1000b
	PCON	87h	Power control register (power on reset)	0001 0000b
Interrupt control registers	IP_EX	E9h	Extend interrupt priority register	0000 0000b
	IE_EX	E8h	Extend interrupt enable register	0000 0000b
	GPIO_IE	CFh	GPIO interrupt enable register	0000 0000b
	IP	B8h	Interrupt priority register	0000 0000b

	IE	A8h	Interrupt enable register	0000 0000b
Flash-ROM registers	ROM_DATA_H	8Fh	Flash-ROM data register high	xxxx xxxxb
	ROM_DATA_L	8Eh	Flash-ROM data register low	xxxx xxxxb
	ROM_DATA	8Eh	16-bit SFR consists of ROM_DATA_L and ROM_DATA_H	xxxxh
	ROM_STATUS	86h	flash-ROM status register (read only)	1000 0000b
	ROM_CTRL	86h	flash-ROM control register (write only)	0000 0000b
	ROM_ADDR_H	85h	flash-ROM address register high	xxxx xxxxb
	ROM_ADDR_L	84h	flash-ROM address register low	xxxx xxxxb
	ROM_ADDR	84h	16-bit SFR consists of ROM_ADDR_L and ROM_ADDR_H	xxxxh
Port setting registers	XBUS_SPEED	FDh	XBUS speed configuration register	1111 1111b
	XBUS_AUX	A2h	XBUS auxiliary configuration register	0000 0000b
	PIN_FUNC	CEh	Pin function selection register	0000 0000b
	P4_CFG	C7h	Port4 configuration register	0000 0000b
	P5_IN	C7h	Port5 input register (read-only):	0000 0000b
	PORT_CFG	C6h	Port configuration register	0000 1111b
	P0_PU	C5h	Port0 pull-up enable register (En_P0_Pullup=0)	0000 0000b
			Port0 pull-up enable register (En_P0_Pullup=1)	1111 1111b
	P0_DIR	C4h	Port0 direction control register	0000 0000b
	P4_PU	C3h	Port4 pull-up enable register	1111 1111b
	P4_DIR	C2h	Port4 direction control register	0000 0000b
	P4_IN	C1h	Port4 input register (read-only):	1111 1111b
	P4_OUT	C0h	Port4 output register	0000 0000b
	P3_PU	BFh	Port3 pull-up enable register	1111 1111b
	P3_DIR	BEh	Port3 direction control register	0000 0000
	P2_PU	BDh	Port2 pull-up enable register	1111 1111b
	P2_DIR	BCh	Port2 direction control register	0000 0000b
	P1_PU	BBh	Port1 pull-up enable register	1111 1111b
	P1_DIR	BAh	Port1 direction control register	0000 0000b
	P1_IE	B9h	Port1 input enable register	1111 1111b
	P3	B0h	Port3 input & output register	1111 1111b
	P2	A0h	Port2 input & output register	1111 1111b
	P1	90h	Port1 input & output register	1111 1111b
	P0	80h	Port0 input & output register	1111 1111b
Timer/counter 0 and 1 registers	TH1	8Dh	Timer1 count register high	xxxx xxxxb
	TH0	8Ch	Timer0 count register high	xxxx xxxxb
	TL1	8Bh	Timer1 count register low	xxxx xxxxb
	TL0	8Ah	Timer0 count register low	xxxx xxxxb
	TMOD	89h	Timer0/1 mode register	0000 0000b
	TCON	88h	Timer0/1 control register	0000 0000b
UART0 registers	SBUF	99h	UART0 data register	xxxx xxxxb
	SCON	98h	UART0 control register	0000 0000b
Timer/counter2 registers	TH2	CDh	Timer2 count register high	0000 0000b
	TL2	CCh	Timer2 count register low	0000 0000b
	T2COUNT	CCh	16-bit SFR consists of TL2 and TH2	0000h
	T2CAP1H	CDh	Timer2 capture 1 data high byte (read only)	xxxx xxxxb
	T2CAP1L	CCh	Timer2 capture 1 data low byte (read only)	xxxx xxxxb
	T2CAP1	CCh	16-bit SFR consists of T2CAP1L and T2CAP1H	xxxxh
	RCAP2H	CBh	Count reload/capture 2 data register high	0000 0000b
	RCAP2L	CAh	Count reload/capture 2 data register low	0000 0000b
	RCAP2	CAh	16-bit SFR consists of RCAP2L and RCAP2H	0000h

	T2MOD	C9h	Timer2 mode register	0000 0000b
	T2CON	C8h	Timer2 control register	0000 0000b
Timer/counter3 registers	T3_FIFO_H	AFh	Timer3 FIFO register high	xxxx xxxxb
	T3_FIFO_L	AEh	Timer3 FIFO register low	xxxx xxxxb
	T3_FIFO	AEh	16-bit SFR consists of T3_FIFO_L and T3_FIFO_H	xxxxh
	T3_DMA_AH	ADh	DMA address register high	0000 xxxxb
	T3_DMA_AL	ACh	DMA address register low	xxxx xxx0b
	T3_DMA	ACh	16-bit SFR consists of T3_DMA_AL and T3_DMA_AH	0xxxh
	T3_DMA_CN	ABh	DMA remainder word count register	0000 0000b
	T3_CTRL	AAh	Timer3 control register	0000 0010b
	T3_STAT	A9h	Timer3 status register	0000 0000b
	T3_END_H	A7h	Timer3 final count value high	xxxx xxxxb
	T3_END_L	A6h	Timer3 final count value low	xxxx xxxxb
	T3_END	A6h	16-bit SFR consists of T3_END_L and T3_END_H	xxxxh
	T3_COUNT_H	A5h	Timer3 current count high byte (read only)	0000 0000b
	T3_COUNT_L	A4h	Timer3 current count low byte (read only)	0000 0000b
	T3_COUNT	A4h	16-bit SFR consists of T3_COUNT_L and T3_COUNT_H	0000h
	T3_CK_SE_H	A5h	Timer3 clock divisor setting high byte	0000 0000b
	T3_CK_SE_L	A4h	Timer3 clock divisor setting low byte	0010 0000b
	T3_CK_SE	A4h	16-bit SFR consists of T3_CK_SE_L and T3_CK_SE_H	0020h
	T3_SETUP	A3h	Timer3 setup register	0000 0100b
SPI0 registers	SPI0_SETUP	FCh	SPI0 register	0000 0000b
	SPI0_S_PRE	FBh	SPI0 slave preset value register	0010 0000b
	SPI0_CK_SE	FBh	SPI0 clock divisor setting register	0010 0000b
	SPI0_CTRL	FAh	SPI0 control register	0000 0010b
	SPI0_DATA	F9h	SPI0 data register	xxxx xxxxb
	SPI0_STAT	F8h	SPI0 status register	0000 1000b
UART1 registers	SER1_DLL	9Ah	UART1 baud rate divisor latch LSB	xxxx xxxxb
	SER1_FIFO	9Ah	UART1 FIFO data register	xxxx xxxxb
	SER1_DIV	97h	UART1 prescaler divisor register	0xxx xxxxb
	SER1_ADDR	97h	UART1 bus address preset register	1111 1111b
	SER1_MSR	96h	UART1 MODEM status register (read-only)	1111 0000b
	SER1_LSR	95h	UART1 line status register (read-only)	0110 0000b
	SER1_MCR	94h	UART1 MODEM control register	0000 0000b
	SER1_LCR	93h	UART1 line control register	0000 0000b
	SER1_IIR	92h	UART1 interrupt recognition register (read-only)	0000 0001b
	SER1_FCR	92h	FIFO control register (write-only)	0000 0000b
	SER1_DLM	91h	UART1 baud rate divisor latch MSB	1000 0000b
	SER1_IER	91h	UART1 interrupt enable register	0000 0000b
ADC registers	ADC_EX_SW	F7h	ADC extend switch control register	0000 0000b
	ADC_SETUP	F6h	ADC setup register	0000 1000b
	ADC_FIFO_H	F5h	ADC FIFO high byte (read-only)	0000 0xxxb
	ADC_FIFO_L	F4h	ADC FIFO low byte (read-only)	xxxx xxxxb
	ADC_FIFO	F4h	16-bit SFR consists of ADC_FIFO_L and ADC_FIFO_H	0xxxh
	ADC_CHANN	F3h	ADC channel selection register	0000 0000b
	ADC_CTRL	F2h	ADC control register	0000 0000b

	ADC_STAT	F1h	ADC status register	0000 0100b
	ADC_CK_SE	EFh	ADC clock divisor setting register	0001 0000b
	ADC_DMA_CN	EEh	DMA remainder word count register	0000 0000b
	ADC_DMA_AH	EDh	DMA current buffer address higher byte	0000 xxxxb
	ADC_DMA_AL	ECh	DMA current buffer address low byte	xxxx xxx0b
	ADC_DMA	ECh	ADC_DMA_AL and ADC_DMA_AH form 16-bit SFR	0xxxh
USB registers	USB_DMA_AH	E7h	Current DMA address high byte (read-only)	0000 xxxxb
	USB_DMA_AL	E6h	Current DMA address low byte (read-only)	xxxx xxx0b
	USB_DMA	E6h	16-bit SFR consists of USB_DMA_AL and USB_DMA_AH	0xxxh
	UDEV_CTRL	E4h	USB device port control register	0100 x000b
	USB_DEV_AD	E3h	USB device address register	0000 0000b
	USB_CTRL	E2h	USB control register	0000 0110b
	USB_INT_EN	E1h	USB interrupt enable register	0000 0000b
	UEP4_T_LEN	DFh	Endpoint4 transmittal length register	0xxx xxxxb
	UEP4_CTRL	DEh	Endpoint4 control register	0000 0000b
	UEP0_T_LEN	DDh	Endpoint0 transmittal length register	0xxx xxxxb
	UEP0_CTRL	DCh	Endpoint0 control register	0000 0000b
	USB_MIS_ST	DAh	USB miscellaneous status register (read only)	xx10 1000b
	USB_INT_ST	D9h	USB interrupt status register (read only)	00xx xxxxb
	USB_INT_FG	D8h	USB interrupt flag register	0010 0000b
	UEP3_T_LEN	D7h	Endpoint3 transmittal length register	0xxx xxxxb
	UEP3_CTRL	D6h	Endpoint3 control register	0000 0000b
	UEP2_T_LEN	D5h	Endpoint2 transmittal length register	0000 0000b
	UEP2_CTRL	D4h	Endpoint2 control register	0000 0000b
	UEP1_T_LEN	D3h	Endpoint1 transmittal length register	0xxx xxxxb
	UEP1_CTRL	D2h	Endpoint1 control register	0000 0000b
	USB_RX_LEN	D1h	USB receiving length register (read only)	0xxx xxxxb
USB registers on xSFR	UEP4_1_MOD	2446h	Endpoint1&4 mode control register	0000 0000b
	UEP2_3_MOD	2447h	Endpoint2&3 mode control register	0000 0000b
	UEP0_DMA_H	2448h	Endpoint0&4 buffer start address high byte	0000 xxxxb
	UEP0_DMA_L	2449h	Endpoint0&4 buffer start address low byte	xxxx xxx0b
	UEP0_DMA	2448h	16-bit SFR consists of UEP0_DMA_L and UEP0_DMA_H	0xxxh
	UEP1_DMA_H	244Ah	Endpoint1 buffer start address high byte	0000 xxxxb
	UEP1_DMA_L	244Bh	Endpoint1 buffer start address low byte	xxxx xxx0b
	UEP1_DMA	244Ah	16-bit SFR consists of UEP1_DMA_L and UEP1_DMA_H	0xxxh
	UEP2_DMA_H	244Ch	Endpoint2 buffer start address high byte	0000 xxxxb
	UEP2_DMA_L	244Dh	Endpoint2 buffer start address low byte	xxxx xxx0b
	UEP2_DMA	244Ch	16-bit SFR consists of UEP2_DMA_L and UEP2_DMA_H	0xxxh
	UEP3_DMA_H	244Eh	Endpoint3 buffer start address high byte	0000 xxxxb
	UEP3_DMA_L	244Fh	Endpoint3 buffer start address low byte	xxxx xxx0b
	UEP3_DMA	244Eh	16-bit SFR consists of UEP3_DMA_L and UEP3_DMA_H	0xxxh
	pU*	254*h	pdata type above while bXIR_XSFR is set to 1, which is faster than xdata type	
LED control card registers on xSFR	LED_STAT	2880h	LED status register	010x 0000b
	LED_CTRL	2881h	LED control register	0000 0010b
	LED_FIFO_CN	2882h	FIFO counter status register (read-only)	0000 0000b
	LED_DATA	2882h	LED data register (write-only)	xxxx xxxxb

	LED_CK_SE	2883h	LED clock divisor setting register	0001 0000b
	LED_DMA_AH	2884h	DMA address high byte	0000 xxxxb
	LED_DMA_AL	2885h	DMA address low byte	xxxx xxx0b
	LED_DMA	2884h	16-bit SFR consists of LED_DMA_AL and LED_DMA_AH	0xxxh
	LED_DMA_CN	2886h	LED DMA remainder word count register	xxxx xxxxb
	LED_DMA_XH	2888h	Auxiliary DMA buffer address high byte	0000 xxxxb
	LED_DMA_XL	2889h	Auxiliary DMA buffer address low byte	xxxx xxx0b
	LED_DMA_X	2888h	16-bit SFR consists of LED_DMA_XL and LED_DMA_XH	0xxxh
	pLED_*	298*h	Used to address xSFR above in pdata type while bXIR_XSFR is set to 1, which is faster than xdata type	

5.3 General-purpose 8051 Register

Table 5.3.1 List of general-purpose 8051 registers

Name	Address	Description	Reset value
B	F0h	B register	00h
A, ACC	E0h	Accumulator	00h
PSW	D0h	Program status register	00h
GLOBAL_CFG	B1h	Global configuration register (Bootloader)	A0h
		Global configuration register (application)	80h
CHIP_ID	A1h	Chip ID (read-only)	58h
SAFE_MOD	A1h	Safe mode control register (write only)	00h
PCON	87h	Power control register (power on reset)	10h
DPH	83h	Data pointer high	00h
DPL	82h	Data pointer low	00h
DPTR	82h	16-bit SFR consists of DPL and DPH	0000h
SP	81h	Stack pointer	07h

B register (B):

Bit	Name	Access	Description	Reset value
[7:0]	B	RW	Arithmetic register, mainly used for multiplication and division operations, it supports bit addressing	00h

A accumulator (A, ACC):

Bit	Name	Access	Description	Reset value
[7:0]	A/ACC	RW	Arithmetic accumulator, supports bit addressing	00h

Program status register (PSW):

Bit	Name	Access	Description	Reset value
7	CY	RW	Carry flag: used to record the carry or borrow of the highest bit. This bit is set when the last arithmetic operation resulted in a carry (addition) or a borrow (subtraction). It is cleared to 0 by all other arithmetic	0

			operations.	
6	AC	RW	Auxiliary carry flag. This bit is set to 1 when the last arithmetic operation resulted in a carry into(addition) or a borrow from(subtraction)the high order nibble. It is cleared to 0 by all other arithmetic operations.	0
5	F0	RW	Flag0: It supports bit addressing. User-defined. Can be reset or set by software.	0
4	RS1	RW	Register bank select control bit 1	0
3	RS0	RW	Register bank select control bit 0	0
2	OV	RW	Overflow flag: This bit is set to 1 when the operation result exceeds 8-bit binary number in addition/subtraction operations, and the flag will overflow. Otherwise it will be cleared to 0.	0
1	F1	RW	Flag1: It supports bit addressing. User-defined. Can be reset or set by software.	0
0	P	RO	Parity flag: It records the parity of "1" in accumulator A after the instruction is executed. This bit is set to 1 if the number of "1" is odd. It is cleared if the number of "1" is even.	0

The program status word (PSW) contains status that reflects the current state of the CPU and it supports bit addressing. It contains the carry bit, the auxiliary carry (for BCD operation), parity bit, overflow bit and the 2 register bank select bits RS0 and RS1. The space of register bank may be accessed by direct or indirect way.

Table 5.3.2 List of register bank RS1 and RS0

RS1	RS0	Register bank
0	0	Bank0 (00h-07h)
0	1	Bank1 (08h-0Fh)
1	0	Bank2 (10h-17h)
1	1	Bank3 (18h-1Fh)

Table 5.3.3 Operations affecting flag bits (X means that the flag bit is related to the operation result)

Operation	CY	OV	AC	Operation	CY	OV	AC
ADD	X	X	X	SETB C	1		
ADDC	X	X	X	CLR C	0		
SUBB	X	X	X	CPL C	X		
MUL	0	X		MOV C, bit	X		
DIV	0	X		ANL C, bit	X		
DA A	X			ANL C,/bit	X		
RRC A	X			ORL C, bit	X		
RLC A	X			ORL C,/bit	X		
CJNE	X						

Data pointer register (DPTR):

Bit	Name	Access	Description	Reset value
[7:0]	DPL	RW	Data pointer low byte	00h
[7:0]	DPH	RW	Data pointer high byte	00h

The16-bit data pointer (DPTR) consists of DPL and DPH, which is used to access xSFR, xBUS, xRAM data memory and program memory. Actually, DPTR has 2 physical 16-bit data pointers DPTR0 and DPTR1, which are dynamically switched by DPS in XBUS_AUX.

Stack pointer (SP):

Bit	Name	Access	Description	Reset value
[7:0]	SP	RW	Stack pointer, mainly used for program and interrupt call, also for data push and pull	07h

Specific function of stack: protect breakpoint and protect site, and carry out management on the first-in last-out principle. During instack, SP pointer automatically adds 1, saving the data and breakpoint information. During outstack, SP pointer points to the data unit and automatically subtracts 1. The initial value of SP is 07h after reset, and the corresponding default stack storage starts from 08h.

5.4 Unique Register

Global configuration register (GLOBAL_CFG), only can be written in safe mode:

Bit	Name	Access	Description	Reset value
[7:6]	Reserved	RO	Fixed to 10	10b
5	bBOOT_LOAD	RO	Boot loader status bit, for discriminating Bootloader or Application. Set to 1 by power on reset. Cleared to 0 by software reset. For all chips with ISP boot loader: 1 = it has never been reset by software, usually in ISP boot loader state. 0 = it has been reset by software, usually in application state.	1
4	bSW_RESET	RW	Software reset control bit. If it is set to 1, software reset occurs. Automatically reset by hardware.	0
3	bCODE_WE	RW	Flash-ROM write enable: 0 = Write protection. 1 = Flash-ROM can be written and erased.	0
2	bDATA_WE	RW	Flash-ROM DataFlash write enable: 0 = Write protection. 1 = DataFlash can be written and erased.	0
1	bXIR_XSFR	RW	MOVX_@R0/R1 command field control bit: 0 = MOVX_@R0/R1 for standard xdata area xRAM/xBUS/xSFR. 1 = MOVX_@R0/R1 for xSFR only, not for xRAM/xBUS	0
0	bWDOG_EN	RW	Watchdog reset enable bit: 0 = as timer only. 1 = enable reset if timer overflow.	0

Chip ID (CHIP_ID):

Bit	Name	Access	Description	Reset value
[7:0]	CHIP_ID	RO	Fixed to 58h, used for chip identification	58h

Safe mode control register (SAFE_MOD):

Bit	Name	Access	Description	Reset value

[7:0]	SAFE_MOD	WO	To enter or get out of safe mode	00h

Some SFRs can only be written in safe mode, while they are always read-only in non-safe mode. Steps to enter safe mode:

(1) Write 55h to register.

(2) Write AAh to register.

(3) 13-23 system frequency periods are in safe mode, one or more safe SFRs or general SFRs can be changed during this time.

(4) After the period expires, safe mode ends automatically.

(5) Write anything to this register can get out of safe mode in advance.

6. Memory Structure

6.1 Memory Space

CH558 addressing memory is divided into program memory, internal code memory and external data memory.

Figure 6.1 Diagram of memory structure

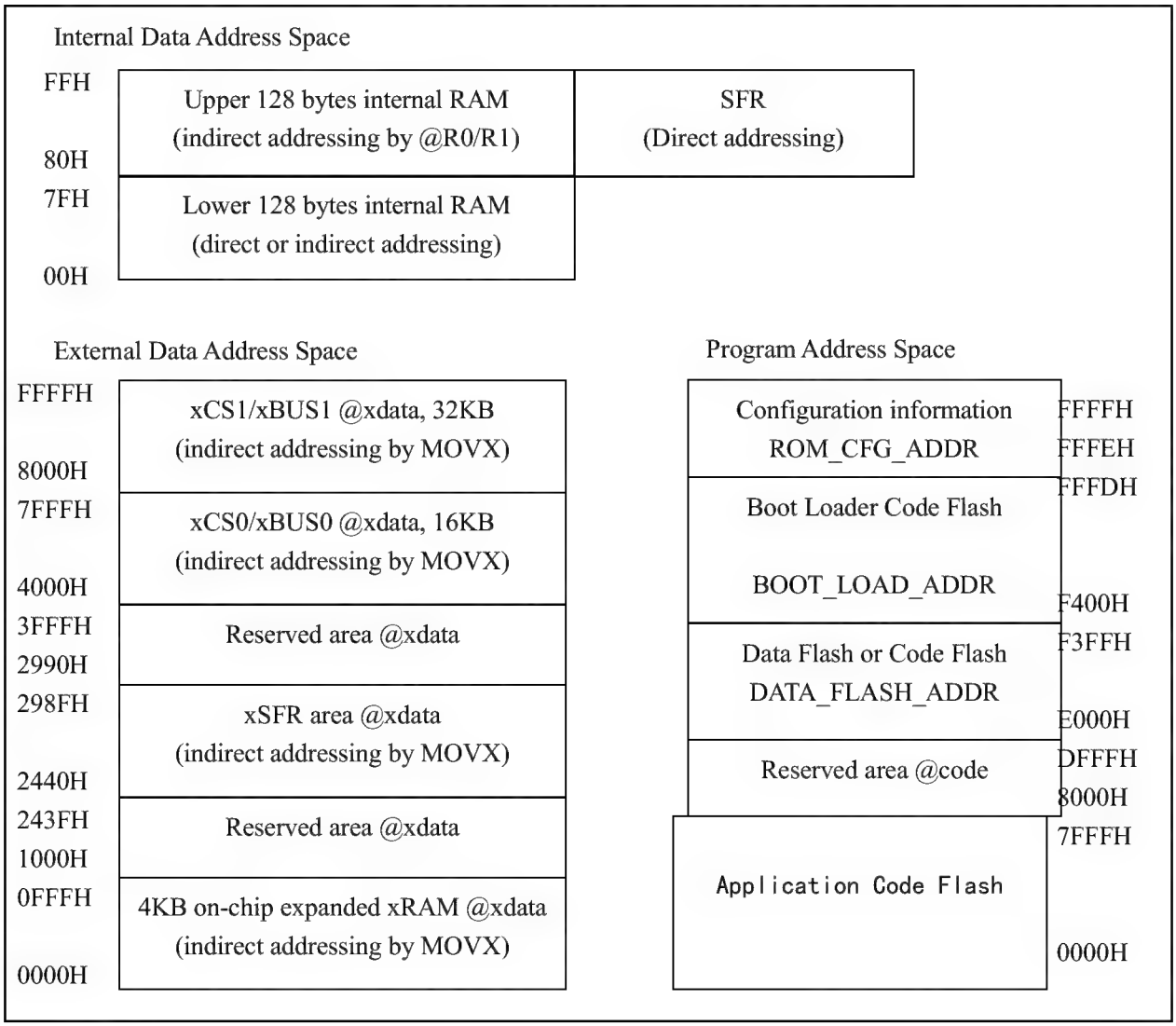

6.2 Program Memory

Program memory is total 64KB, as shown in Figure 6.1, 40KB is used for flash-ROM, including CodeFlash to save the command code, DataFlash to save the non-volatile data, and Configuration Information space to configure the information.

DataFlash addressing from E000h to F3FFH, supports byte (8-bit) read, dual-byte (16-bit) write and block (1K byte) erase, keeping the data after chip power-down.

CodeFlash includes application code of low address and Bootloader code of high address.

Configuration information is total 16-bit, and may be configured by programmer, refer to Table 6.1.

Table 6.2 Description of flash-ROM Configuration Information

Address	Name	Description	Recommended value
15	Code_Protect	Code and data protection mode of flash-ROM: 0 = Reading behavior forbidden. 1 = Reading behavior permit.	0/1
14	No_Boot_Load	BootLoader start mode enable: 0 = Start from address 0000h. 1 = Start from address F400h.	1
13	En_Long_Reset	Additional delay during power-up reset enable: 0 = Standard short reset. 1 = Long reset, add 87mS.	0
12	XT_OSC_Strong	Crystal oscillator output driving ability: 0 = Standard. 1 = Enhanced.	0
11	En_P5.7_RESET	P5.7 reset function enable: 0 = Disable. 1 = Enable.	1
10	En_P0_Pullup	P0 pull-up resistor enable during system reset: 0 = Disable. 1 = Enable.	1
9	Must_1	(Auto set to 1 by the programmer)	1
8	Must_0	(Auto set to 0 by the programmer)	0
[7:0]	All_1	(Auto set to FFh by the programmer)	FFh

6.3 Data Memory Space

Internal data memory is total 256 bytes, as shown in figure 6.1, are all used for SFR and iRAM, iRAM is used for stack and fast data cache, including R0-R7, bit data, byte data, and idata.

External data memory is total 64KB, as shown in Figure 6.1, 4KB of it are used for on-chip xRAM and xSFR, except the reserved area, others (4000h to FFFFh) are all used for external parallel bus.

6.4 flash-ROM Register

Table 6.4 List of flash-ROM registers

Name	Address	Description	Reset value
ROM_DATA_H	8Fh	Flash-ROM data register high byte	xxh
ROM_DATA_L	8Eh	Flash-ROM data register low byte	xxh
ROM_DATA	8Eh	16-bit SFR consists of ROM_DATA_L and ROM_DATA_H	xxxxh
ROM_STATUS	86h	flash-ROM status register (read only)	80h
ROM_CTRL	86h	flash-ROM control register (write only)	00h
ROM_ADDR_H	85h	flash-ROM address register high byte	xxh

ROM_ADDR_L	84h	flash-ROM address register low byte	xxh
ROM_ADDR	84h	16-bit SFR consists of ROM_ADDR_L and ROM_ADDR_H	xxxxh

Flash-ROM address register (ROM_ADDR):

Bit	Name	Access	Description	Reset value
[7:0]	ROM_ADDR_H	RW	Flash-ROM address register high byte	xxh
[7:0]	ROM_ADDR_L	RW	Flash-ROM address register low byte, supports even address only	xxh

Flash-ROM data register (ROM_DATA):

Bit	Name	Access	Description	Reset value
[7:0]	ROM_DATA_H	RW	Flash-ROM data register high byte	xxh
[7:0]	ROM_DATA_L	RW	Flash-ROM data register low byte	xxh

Flash-ROM control register (ROM_CTRL):

Bit	Name	Access	Description	Reset value
[7:0]	ROM_CTRL	WO	Flash-ROM control register	00h

Flash-ROM status register (ROM_STATUS):

Bit	Name	Access	Description	Reset value
7	Reserved	RO	Reserved	1
6	bROM_ADDR_OK	RO	Flash-ROM address valid bit: 0 = Invalid. 1 = Valid.	0
[5:2]	Reserved	RO	Reserved	0000b
1	bROM_CMD_ERR	RO	Flash-ROM command error bit: 0 = Valid. 1 = Unknown command.	0
0	bROM_CMD_TOUT	RO	Flash-ROM operation result bit: 0 = Success. 1 = Time out.	0

6.5 flash-ROM Operation Steps

1. Flash-ROM erase, changing all data bits in the target block to 1:
   (1) Get into safe mode, SAFE_MOD = 55h; SAFE_MOD = 0AAh;
   (2) Enable writing by setting GLOBAL_CFG, bCODE_WE corresponds to code, and bDATA_WE to data;
   (3) Set ROM_ADDR, write in 16-bit destination address, high 6-bit valid only;
   (4) Set ROM_CTRL to 0A6h, execute block erase, and the program will suspend during the operation;
   (5) After the operation, the program goes on, read ROM_STATUS to check the operation result. If multiple blocks need to be erased, repeat steps from (3) to (5);
   (6) Get into safe mode again, SAFE_MOD = 55h; SAFE_MOD = 0AAh;
   (7) Disable writing by setting GLOBAL_CFG, bCODE_WE = 0, bDATA_WE = 0.

2. Flash-ROM write, changing some data bits in the target dual byte from 1 to 0:

(1) Get into safe mode, SAFE_MOD = 55h; SAFE_MOD = 0AAh;
(2) Enable writing by setting GLOBAL_CFG, bCODE_WE corresponds to code, and bDATA_WE to data;
(3) Set ROM_ADDR, write in 16-bit destination address, high 15-bit valid only;
(4) Set ROM_DATA, write in 16-bit data, step (3) and step (4) may be exchanged;
(5) Set ROM_CTRL to 09Ah, execute writing, and the program will suspend during the operation;
(6) After the operation, the program goes on, read ROM_STATUS to check the operation result. If multiple data need to be written, repeat steps from (3) to (6);
(7) Get into safe mode again, SAFE_MOD = 55h; SAFE_MOD = 0AAh;
(8) Set GLOBAL_CFG to disable writing, bCODE_WE = 0, bDATA_WE = 0.

3. Flash-ROM read:
Read data or code from the destination address through instruction MOVC or pointer of program area.

6.6 On-board Program and ISP Download

When Code_Protect=1, code and data in CH558 flash-ROM may be read and written through synchronous serial interface by the programmer. When Code_Protect=0, code and data in CH558 flash-ROM are protected, it can be erased but not read, Code_Protect will be removed after erase when power-on.

When CH558 presets Bootloader, it supports downloading application code through USB or UART. Without Bootloader, application code and Bootloader may only download through specialized programmer. Reserve 5 wires between CH558 and programmer for on-board programming in the circuit.

Table 6.6.1 Wires between CH558 and programmer

Pin	GPIO	Pin description
RST	P5.7	Reset control, get into programming state when high level
SCS	P1.4	Chip selection, high level default, active low
SCK	P1.7	Clock in
MOSI	P1.5	Data in
MISO	P1.6	Data out

6.7 Global Unique ID

CH558 MCUs all have a global unique identification number (ID) when out of factory. ID and verification total 8 bytes, located in the special read-only register form address 20h. User can get ID by reading CodeFlash when E_DIS is 1 and global interrupt is disabled. For details, please refer to program routine GETID.C.

Table 6.7.1 Chip ID address table

Address	ID description
20h, 21h	ID number first word, little-endian
22h, 23h	ID number second word, little-endian
24h, 25h	ID number third word, little-endian
26h, 27h	ID number word CUSUM verification

The ID number can be used with the downloading tools to encrypt the target program. For the general application, only the first 32 bits of the ID number are used.

7. Power Management, Sleep and Reset

7.1 External Power Input

CH558 works at voltage 3.3V inside, I/O input and output at 3.3V ,except pins: P1.0～P1.7, XI, XO, RST, all pins may tolerate 5V input, built-in 5V to 3.3V LDO, support external 3.3V and 5V input, reference below:

External power voltage	VIN5 voltage: 3.3V-5V	VDD33 voltage: 3.3V
3.3V Including <3.6V	3.3V voltage input. A decoupling capacitor not less than 0.1uF to the ground necessarily.	External 3.3V input is used for internal operating voltage. A decoupling capacitor not less than 0.1uF to the ground necessarily.
5V Including >3.6V	5V voltage input. A decoupling capacitor not less than 0.1uF to the ground necessarily.	Internal voltage adapter 3.3V output and internal 3.3V operating power input. A decoupling capacitor not less than 3.3uF to the ground necessary.

After power-on or system reset, CH558 is in running status by default. When some function modules are unused, close their clocks to reduce power dissipation. When CH558 is no need to run, set PD in PCON to get into sleep modes, and may be waked up by USB, UART0, UART1, SPI0 or some GPIOs.

7.2 Power and Sleep Control Register

Table 7.2.1 Power and sleep control registers

Name	Address	Description	Reset value
WDOG_COUNT	FFh	Watchdog count register	00h
RESET_KEEP	FEh	Reset keeping register	00h
WAKE_CTRL	EBh	Wake-up control register	00h
SLEEP_CTRL	EAh	Sleep control register	00h
PCON	87h	Power control register	10h

Watchdog count register (WDOG_COUNT):

Bit	Name	Access	Description	Reset value
[7:0]	WDOG_COUNT	RW	Watchdog current count value, the interrupt flag bWDOG_IF_TO will auto-set 1 when Watchdog count register overflows. WDOG_COUNT overflows when count to 0FFh and turn to 00h.	00h

Reset keeping register (RESET_KEEP):

Bit	Name	Access	Description	Reset value
[7:0]	RESET_KEEP	RW	Reset keeping register, it may be modified by setting, except power-on reset may set it 0, no other resets may change it.	00h

Wake-up control register (WAKE_CTRL), only can be written in safe mode:

Bit	Name	Access	Description	Reset value
7	bWAK_BY_USB	RW	USB event wake-up enable: 1 = Enable. 0 = Disable.	0
6	bWAK_RXD1_LO	RW	UART1 pin RXD1 low-level input event wake-up	0

			enable: 0 = Disable. 1 = Enable. Select XA/XB differential input in iRS485 mode, otherwise, select RXD1 or RXD1_ according to bIER_PIN_MOD1=1/0	
5	bWAK_P1_5_LO	RW	P1.5 low-level wake-up enable 0 = Disable. 1 = Enable.	0
4	bWAK_P1_4_LO	RW	P1.4 low-level wake-up enable 0 = Disable. 1 = Enable.	0
3	bWAK_P0_3_LO	RW	P0.3 low-level wake-up enable 0 = Disable. 1 = Enable.	0
2	bWAK_CAP3_LO	RW	Timer3 low-level input event wake-up in capture mode: 0 = Disable. 1 = Enable. Select CAP3 or CAP3_ according to bTMR3_PIN_X=0/1.	0
1	bWAK_P3_2E_3L	RW	P3.2 edge change and P3.3 low-level wake-up enable: 0 = Disable. 1 = Enable.	0
0	bWAK_RXD0_LO	RW	UART0 pin RXD0 low-level input wake-up enable: 0 = Disable. 1 = Enable. Select RXD0 or RXD0_ according to bUART0_PIN_X=0/1.	0

Sleep control register (SLEEP_CTRL), only can be written in safe mode:

Bit	Name	Access	Description	Reset value
7	bSLP_OFF_USB	RW	USB clock off control 1 = clock off.	0
6	bSLP_OFF_ADC	RW	ADC clock off control 1 = clock off.	0
5	bSLP_OFF_UART1	RW	UAR1 clock off control 1 = clock off.	0
4	Reserved	RO	Reserved	0
3	bSLP_OFF_SPI0	RW	SPI0 clock off control 1 = clock off.	0
2	bSLP_OFF_TMR3	RW	Timer3 clock off control 1 = clock off.	0
1	bSLP_OFF_LED	RW	LED-CTRL clock off control 1 = clock off.	0
0	bSLP_OFF_XRAM	RW	xRAM clock off control 1 = clock off.	0

Power control register (PCON):

Bit	Name	Access	Description	Reset value
7	SMOD	RW	Baud rate selection for UART0 mode 1/2/3 when timer1 is used to generate UART0 baud rate: 0 = Slow mode. 1 = Fast mode.	0
6	Reserved	RO	Reserved	0

5	bRST_FLAG1	R0	Recent reset flag high bit	0
4	bRST_FLAG0	R0	Recent reset flag low bit	1
3	GF1	RW	General purpose flag bit 1 User-defined. Can be reset or set by software	0
2	GF0	RW	General purpose flag bit 0 User-defined. Can be reset or set by software	0
1	PD	RW	Power-down enable bit Sleep after set to 1. Auto cleared by wake-up hardware.	0
0	Reserved	RO	Reserved	0

Table 7.2.2 Description of recent reset flag

bRST_FLAG1	bRST_FLAG0	Reset flag description
0	0	Software reset, source: bSW_RESET=1 and (bBOOT_LOAD=0 or bWDOG_EN=1).
0	1	Power on reset, source: voltage on VDD33 is lower than checking voltage.
1	0	Watchdog reset, source: bWDOG_EN=1 and watchdog timeout overflows
1	1	External input manual reset by RST pin, source: En_P5.7_RESET=1 and P5.7 high-level input

7.3 Reset Control

CH558 has 4 reset sources: power-on reset, external input reset, software reset and watchdog reset. The latter three are hot reset.

7.3.1 Power on Reset

Power-on reset (POR) generates from internal voltage detecting circuit. It keeps detecting voltage on VDD33. POR is generated when the detecting voltage is lower than Vpot, and auto delay Tpor to keep reset status. CH558 runs at the end of delay.

Only power on reset can enable CH559 to reload the configuration information and reset RESET_KEEP, other hot resets do not affect.

7.3.2 External input Reset

External input reset is generated by the high-level on RST. When En_P5.7_RESET = 1, and high-level on RST keeping time is longer than the Trsrt, the reset occurs. After high-level ends, auto delay Trdl to keep reset status, CH558 runs from address 0 after delay.

7.3.3 Software Reset

CH558 supports internal software reset to reset the CPU and restart without external intervention. Set bSW_RESET in GLOBAL_CFG to 1 to execute software reset, and auto delay Trdl to keep reset status. CH558 runs from address 0 after delay, and the bSW_RESET bit is reset automatically by hardware.

When bSW_RESET is set to 1, if bBOOT_LOAD=0 or bWDOG_EN=1, then bRST_FLAG1/0 will indicate the software reset after reset. When bSW_RESET is set to 1, if bBOOT_LOAD=1 and bWDOG_EN=0, then bRST_FLAG1/0 will keep the reset flag of last time and no new flag.

Bootloader runs first after power-on reset if ISP Bootloader is downloaded, it switches to the application code through software reset based on requirement. This software reset will clear bBOOT_LOAD, but not affect bRST_FLAG1/0 (as bBOOT_LOAD=1 before reset), so bRST_FLAG1/0 still indicates power on reset status after

switching to application state.

7.3.4 Watchdog Reset

Watchdog reset occurs when the watchdog timer overflows. Watchdog timer is an 8-bit counter, whose clock frequency is Fsys/262144, and the overflow signal is generated when count to 0FFh and turn to 00h.

Watchdog timer overflow signal will trigger bWDOG_IF_TO to 1, which is automatically reset when WDOG_COUNT is reloaded or when it goes into corresponding interrupt service.

Write different initial values to WDOG_COUNT to realize different timing period Twdc. When the system clock is 12MHz, Twdc is about 5.9s when 00h is written, and about 2.8s when 80h is written.

When watchdog timer overflows and bWDOG_EN=1, watchdog reset occurs. Auto delay Trdl to keep reset status. CH558 runs from address 0 after delay.

Clear WDOG_COUNT timely to avoid watchdog reset when bWDOG_EN = 1.

8. System Clock

8.1 Diagram of Clock

Figure 8.1.1 Clock system and structure diagram

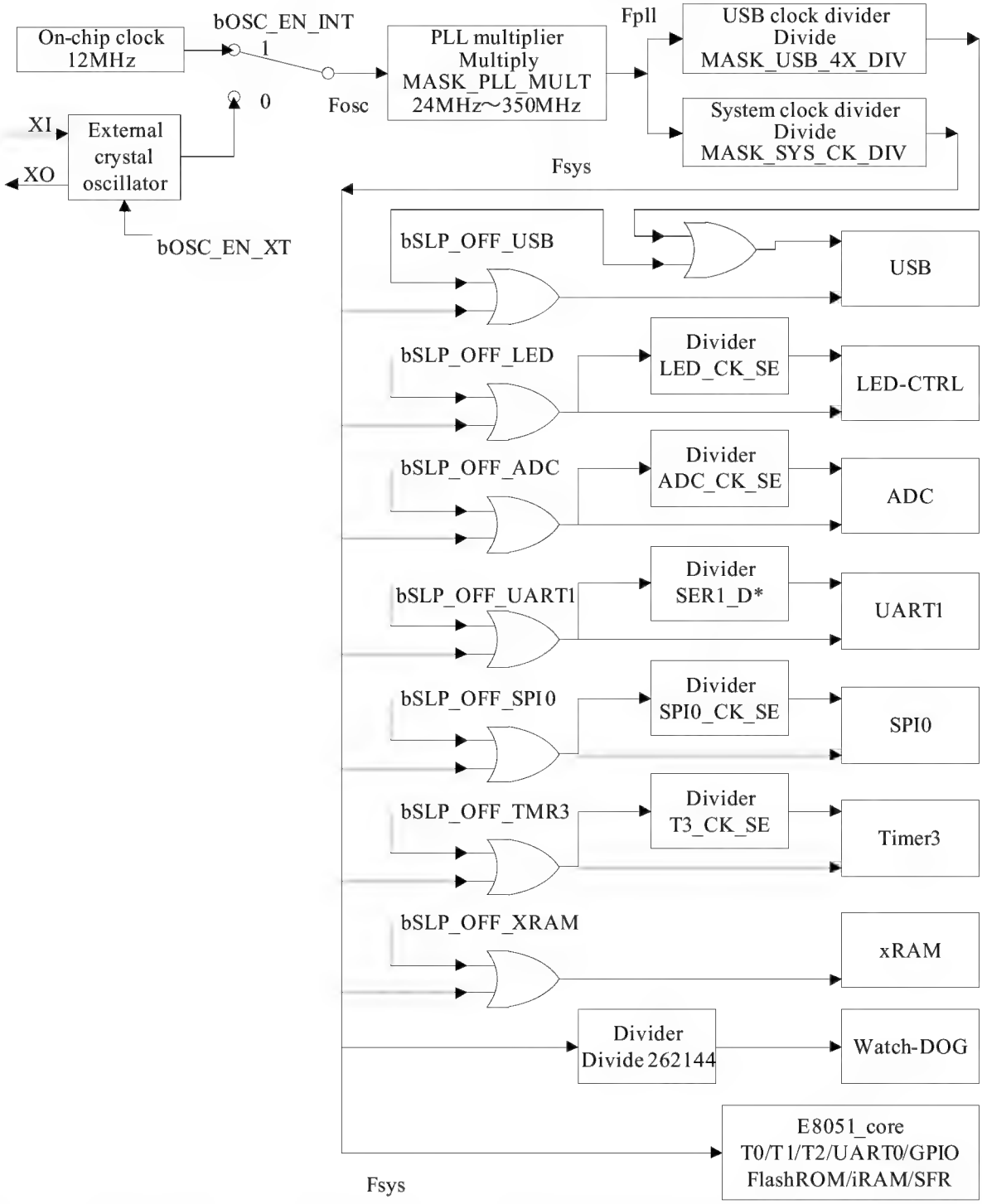

Select one of internal clock or external clock as source clock, then generate high frequency Fpll after frequency multiplier PLL. Generate system clock Fsys and USB module clock Fusb4x after 2 frequency dividers. The system clock Fsys is provided to different modules of CH558 directly or after clock gate, to reduce power dissipation, set sleep control register to close unused modules clocks.

8.2 Register Description

Table 8.2.1 Clock control registers

Name	Address	Description	Reset value
CLOCK_CFG	B3h	System clock configuration register	98h
PLL_CFG	B2h	PLL clock configuration register	D8h

System clock configuration register (CLOCK_CFG), only can be written in safe mode:

Bit	Name	Access	Description	Reset value
7	bOSC_EN_INT	RW	On-chip crystal oscillator enable 1 = Enable. 0 = On-chip crystal oscillator disabled and external crystal oscillator enabled	1
6	bOSC_EN_XT	RW	External crystal oscillator enable 1 = Enable, a crystal or ceramic oscillator to XI (P4.6) and XO (P4.7). An external quartz crystal or ceramic oscillator needs to be connected between XI and XO. 0 = Disable external oscillator.	0
5	bWDOG_IF_TO	RO	Watchdog interrupt flag: 1 = Interrupt from timer overflow. 0 = No interrupt. This bit will be automatically reset after WDOG_COUNT reloads or gets into corresponding interrupt service.	0
[4:0]	MASK_SYS_CK_DIV	RW	System clock frequency division factor 00000b means 100000b.	11000b

PLL clock configuration register (PLL_CFG), only can be written in safe mode:

Bit	Name	Access	Description	Reset value
[7:5]	MASK_USB_4X_DIV	RW	USB clock divisor factor, 000b means 1000b.	110b
[4:0]	MASK_PLL_MULT	RW	PLL reference clock multiplier factor	11000b

8.3 Clock Configuration

CH558 uses on-chip 12 MHz clock after power-on by default. And select on-chip clock or external clock by CLOCK_CFG. Pins XI and XO may be used as GPIOs when external crystal oscillator is disabled. Connect an oscillator between pins XI and XO when external crystal oscillator is enabled. In addition, connect a oscillating capacitor between XI and GND, XO and GND. When external clock is input directly, connect it to XI and keep XO suspended.

Source clock frequency: Fosc = bOSC_EN_INT ? 12MHz : Fxt
PLL frequency: Fpll = Fosc * (PLL_CFG & MASK_PLL_MULT)
USB clock divisor factor: Kusb = (PLL_CFG & MASK_USB_4X_DIV) >> 5
USB clock: Fusb4x = Fpll / (Kusb? Kusb: 8)
System clock divisor factor: Ksys = CLOCK_CFG & MASK_SYS_CK_DIV
System frequency: Fsys = Fpll / (Ksys? Ksys: 32)
Default status after reset, Fosc=12MHz, Fpll=288MHz, Fub4x=48MHz, Fsys=12MHz.

Steps to switch to external crystal oscillator:
(1) Get into safe mode, SAFE_MOD = 55h, SAFE_MOD = AAh;

(2) Set bOSC_EN_XT in CLOCK_CFG to 1 with "OR" operation, other bits remain unchanged, to enable crystal oscillator;
(3) Delay several milliseconds, usually 5mS ~ 10mS, to wait oscillator work steadily;
(4) Get into safe mode again, SAFE_MOD = 55h, SAFE_MOD = AAh;
(5) Clear bOSC_EN_INT in CLOCK_CFG with "AND" operation, other bits remain unchanged, to switch to external crystal oscillator;
(6) Get out of safe mode. Write any value into SAFE_MOD to get out of safe mode.

Steps to modify system frequency:
(1) Calculate PLL_CFG and CLOCK_CFG in advance to avoid beyond term of safe mode;
(2) Get into safe mode, SAFE_MOD = 55h, SAFE_MOD = AAh;
(3) Write new value to PLL_CFG;
(4) Write new value to CLOCK_CFG;
(5) Get out of safe mode. Write any value into SAFE_MOD to get out of safe mode.

Notes:
(1) PLL frequency is recommended not to beyond 24MHz~350MHz;
(2) Priority-use-of lower Fsys to reduce dynamic power dissipation and get wider Working temperature;;
(3) Set Fusb4x 48MHz when USB module enabled;
(4) Changing external crystal and modifying system frequency are two separate operations, suggestion in two conditions:
(A) If external crystal oscillator frequency is less than 13MHz, switch to external crystal first and then modify system frequency.
(B) If external crystal oscillator frequency is more than 13MHz, reduce PLL reference clock multiplier factor to avoid Fpll overflow first, then switch to external crystal, and modify system frequency at last, or modify system frequency when modify PLL_CFG.

9. Interrupt

CH558 supports 13 interrupt sources, including 6 sources compatible with standard MCS51 interrupt: INT0, T0, INT1, T1, UART0, T2, and 7 extend interrupt sources: SPI0, TMR3, USB, ADC, UART1, WDOG, and GPIO which can be selected from 7 I/O pins.

9.1 Register Description

Table 9.1.1 List of interrupt vector

Interrupt	Entry address	Interrupt No.	Description	Default priority
INT_NO_INT0	0x0003	0	External interrupt0 (bLED_OUT_EN=0) or LED control card interrupt (bLED_OUT_EN=1)	High priority ↓
INT_NO_TMR0	0x000B	1	Timer0 interrupt	↓
INT_NO_INT1	0x0013	2	External interrupt1	↓
INT_NO_TMR1	0x001B	3	Timer1 interrupt	↓
INT_NO_UART0	0x0023	4	UART0 interrupt	↓
INT_NO_TMR2	0x002B	5	Timer2 interrupt	↓
INT_NO_SPI0	0x0033	6	SPI0 interrupt	↓
INT_NO_TMR3	0x003B	7	Timer3 interrupt	↓

INT_NO_USB	0x0043	8	USB interrupt	↓
INT_NO_ADC	0x004B	9	ADC interrupt	↓
INT_NO_UART1	0x0053	10	UART1 interrupt	↓
INT_NO_GPIO	0x0063	12	GPIO interrupt	↓
INT_NO_WDOG	0x006B	13	Watchdog timer interrupt	↓ Low priority

Table 9.1.2 List of interrupt registers

Name	Address	Description	Reset value
IP_EX	E9h	Extend interrupt priority register	00h
IE_EX	E8h	Extend interrupt enable register	00h
GPIO_IE	CFh	GPIO interrupt enable register	00h
IP	B8h	Interrupt priority register	00h
IE	A8h	Interrupt enable register	00h

Interrupt enable register (IE):

Bit	Name	Access	Description	Reset value
7	EA	RW	Global interrupt enable control bit 1= Interrupt is enabled when E_DIS is 0. 0 = All interrupt requests are disabled.	0
6	E_DIS	RW	Global interrupt disable control bit 1 = All interrupt requests are disabled. 0 = Interrupt is enabled when EA is 1. This bit is usually used to disable interrupt temporarily during flash-ROM operation.	0
5	ET2	RW	Timer2 interrupt enable bit 1 = T2 interrupt is enabled. 0 = T2 interrupt is disabled.	0
4	ES	RW	UART0 interrupt enable bit 1 = UART0 interrupt is enabled. 0 = UART0 interrupt is disabled.	0
3	ET1	RW	Timer1 interrupt enable bit 1 = T1 interrupt is enabled. 0 = T1 interrupt is disabled.	0
2	EX1	RW	External interrupt1 enable bit 1 = INT1 interrupt is enabled. 0 = INT1 interrupt is disabled.	0
1	ET0	RW	Timer0 interrupt enable bit 1 = T0 interrupt is enabled. 0 = T0 interrupt is disabled.	0
0	EX0	RW	External interrupt0 and LED control card interrupt enable bit 1 = INT0/LED interrupt (selected by bLED_OUT_EN) is enabled. 0 = INT0/LED interrupt is disabled.	0

Extend interrupt enable register (IE_EX):

Bit	Name	Access	Description	Reset value
7	IE_WDOG	RW	Watchdog timer interrupt enable bit 1 = WDOG interrupt is enabled.	0

			0 = WDOG interrupt is disabled.	
6	IE_GPIO	RW	GPIO interrupt enable bit 1 = GPIO interrupt is enabled. 0 = GPIO interrupt is disabled.	0
5	Reserved	RO	Reserved	0
4	IE_UART1	RW	UART1 interrupt enable bit 1 = UART1 interrupt is enabled. 0 = UART1 interrupt is disabled.	0
3	IE_ADC	RW	ADC interrupt enable bit 1 = ADC interrupt is enabled. 0 = ADC interrupt is disabled.	0
2	IE_USB	RW	USB interrupt enable bit 1 = USB interrupt is enabled. 0 = USB interrupt is disabled.	0
1	IE_TMR3	RW	Timer3 interrupt enable bit 1 = Timer3 interrupt is enabled. 0 = Timer3 interrupt is disabled.	0
0	IE_SPI0	RW	SPI0 interrupt enable bit 1 = SPI0 interrupt is enabled. 0 = SPI0 interrupt is disabled.	0

GPIO interrupt enable register (GPIO_IE):

Bit	Name	Access	Description	Reset value
7	bIE_IO_EDGE	RW	GPIO edge interrupt mode enable: 0 = Level interrupt mode. bIO_INT_AC = 1 and interrupt will be requested constantly if there is a valid GPIO input level; otherwise, bIO_INT_AC = 0 and no interrupt request occurs with invalid GPIO input level. 1 = Edge interrupt mode. There are interrupt flag bIO_INT_ACT and interrupt request with valid GPIO input edge, bIO_INT_ACT cannot be cleared by software, but it is automatically cleared when reset or interrupt program is running in level interrupt mode.	0
6	bIE_RXD1_LO	RW	1 = UART1 RX PIN interrupt is enabled (valid while low level in level mode or falling edge in edge mode). 0 = UART1 RX PIN interrupt is disabled. In IRS485 mode, XA/XB differential input is selected; In non-IRS485 mode, select RXD1 (bIER_PIN_MOD1 = 1) or RXD1_ (bIER_PIN_MOD1 = 0).	0
5	bIE_P5_5_HI	RW	1 = P5.5 interrupt is enabled (valid with high level in level mode or rising edge in edge mode). 0 = P5.5 interrupt is disabled.	0
4	bIE_P1_4_LO	RW	1 = P1.4 interrupt is enabled (valid with low level in level mode or falling edge in edge mode). 0 = P1.4 interrupt is disabled.	0
3	bIE_P0_3_LO	RW	1 = P0.3 interrupt is enabled (valid with low level in level mode or falling edge in edge mode). 0 = P0.3 interrupt is disabled.	0
2	bIE_P5_7_HI	RW	1 = P5.7 interrupt is enabled (valid with high level in level mode or rising edge in edge mode). 0 = P5.7interrupt is disabled.	0
1	bIE_P4_1_LO	RW	1 = P4.1 interrupt is enabled (valid with low level in level mode or falling edge in edge mode). 0 = P4.1 interrupt is disabled.	0
0	bIE_RXD0_LO	RW	1 = UART0 RX interrupt is enabled (valid with low level	0

			in level mode or falling edge in edge mode). 0 = UART0 RX interrupt is disabled. Select RXD0 (bUART0_PIN_X = 0) or RXD0_ (bUART0_PIN_ X = 1).	

Interrupt priority register (IP):

Bit	Name	Access	Description	Reset value
7	PH_FLAG	RO	High-priority interrupt running flag	0
6	PL_FLAG	RO	Low-priority interrupt running flag	0
5	PT2	RW	Timer2 interrupt priority control bit	0
4	PS	RW	UART0 interrupt priority control bit	0
3	PT1	RW	Timer1 interrupt priority control bit	0
2	PX1	RW	External interrupt1 priority control bit	0
1	PT0	RW	Timer0 interrupt priority control bit	0
0	PX0	RW	External interrupt0 and LED control card interrupt priority control bit	0

Extend interrupt priority register (IP_EX):

Bit	Name	Access	Description	Reset value
7	bIP_LEVEL	RO	Current interrupt nesting level flag bit 0 = No interrupt or dual interrupt nesting. 1 = Single interrupt nesting.	0
6	bIP_GPIO	RW	GPIO interrupt priority control bit	0
5	Reserved	RO	Reserved	0
4	bIP_UART1	RW	UART1 interrupt priority control bit	0
3	bIP_ADC	RW	ADC interrupt priority control bit	0
2	bIP_USB	RW	USB interrupt priority control bit	0
1	bIP_TMR3	RW	Timer3 interrupt priority control bit	0
0	bIP_SPI0	RW	SPI0 interrupt priority control bit	0

IP and IP_EX registers are used for interrupt priority setting. The corresponding interrupt source will be high (low) priority if this bit is 1 (0). There is default priority order (refer to Table 9.1.1) for interrupt sources in the same level, the current interrupt priority is shown by PH_FALG combined with PL_FLAG.

Table 9.1.3 Current interrupt priority description

PH_FLAG	PL_FLAG	Interrupt priority state at present
0	0	No interrupt at present
0	1	Low priority interrupt is running at present
1	0	High priority interrupt is running at present
1	1	Unexpected event, unknown error

10. I/O Port

10.1 GPIO Introduction

CH558 provides up to 45 I/O pins, some of which have alternate function. P0～P3 input&output and P4 output

can be addressing by bit.

The pins are general I/O port state if not set reused. All I/O ports have real "read-change-write" function and support SETB or CLR command to change the direction and level of pins while they are used as general digital I/O pins.

10.2 GPIO Register

All registers and bits in this section are generally expressed: "n" (n = 0, 1, 2, 3) to express the serial number of ports, "x" (x = 0, 1, 2, 3, 4, 5, 6, 7) to express the serial number of bits.

Table 10.2.1 List of GPIO registers

Name	Address	Description	Reset value
P0	80h	P0 input/output register	FFh
P0_DIR	C4h	P0 direction control register	00h
P0_PU	C5h	P0 pull-up enable register	00h/FFh
P1	90h	P1 input/output register	FFh
P1_IE	B9h	P1 input enable register	FFh
P1_DIR	BAh	P1 direction control register	00h
P1_PU	BBh	P1 pull-up enable register	FFh
P2	A0h	P2 input/output register	FFh
P2_DIR	BCh	P2 direction control register	00h
P2_PU	BDh	P2 pull-up enable register	FFh
P3	B0h	P3 input/output register	FFh
P3_DIR	BEh	P3 direction control register	00h
P3_PU	BFh	P3 pull-up enable register	FFh
P4_OUT	C0h	P4 output register	00h
P4_IN	C1h	P4 input register (read-only)	FFh
P4_DIR	C2h	P4 direction control register	00h
P4_PU	C3h	P4 pull-up enable register	FFh
P4_CFG	C7h	P4 configuration register	00h
P5_IN	C7h	P5 input register (read-only)	00h
PIN_FUNC	CEh	Pin function selection register	00h
PORT_CFG	C6h	Port configuration register	0Fh
XBUS_SPEED	FDh	Bus speed configuration register	FFh
XBUS_AUX	A2h	Bus auxiliary configuration register	00h

Port configuration register (PORT_CFG):

Bit	Name	Access	Description	Reset value
[7:4]	bPn_DRV	RW	Port Pn output driver ability select: 0 = Driver current is 5mA level. 1 = Driver current is 20mA level for P0/P2/P3, 10mA for P1.	0000b
[3:0]	bPn_OC	RW	Port Pn open-drain output enable: 0 = Push-pull output. 1 = Open-drain output	1111b

Port Pn input/output register (Pn):

Bit	Name	Access	Description	Reset value
[7:0]	Pn.0～Pn.7	RW	Pn.x pin state input and data output bits, supports addressing by bit.	FFh

Port Pn direction control register (Pn_DIR):

Bit	Name	Access	Description	Reset value
[7:0]	Pn_DIR	RW	Pn.x pin direction setting	00h

P0 pull-up enable register (P0_PU) and Pn pull-up enable register (Pn_PU), n=1/2/3:

Bit	Name	Access	Description	Reset value
[7:0]	P0_PU	RW	P0.x pin pull-up resistor enable (when En_P0_Pullup=0)	00h
			P0.x pin pull-up resistor enable (when En_P0_Pullup=1)	FFh
[7:0]	Pn_PU	RW	Pn.x pin pull-up resistor enable: 0 = Pull-up resistor disabled. 1 = Pull-up resistor enabled.	FFh

Port Pn configuration is realized by bPn_OC (in PORT_CFG), Pn_DIR and Pn_PU, details as follows.

Table 10.2.2 Port configuration register combination

bPn_OC	Pn_DIR	Pn_PU	Description of working mode
0	0	0	High impedance input mode, pins without pull-up resistor
0	0	1	Pull-up input mode, pins with pull-up resistor
0	1	X	Push-pull output mode with symmetry driving ability, a port can output or absorb large current in this mode.
1	0	0	High-impedance input weak standard bi-directional mode with open drain output, pins without pull-up resistor.
1	1	0	Quasi-bidirectional mode of high resistance, open-drain output, pin has no pull-up resistor; when the output is changed from low level to high level, automatically drive the high level of 2 clock cycles to accelerate the conversion.
1	0	1	Weak standard bi-direction mode (as 8051) with pull-up resistor of pin, open drain output, input function is also supported.
1	1	1	Standard bi-direction mode (standard 8051) with pull-up resistor of pin, open drain output, input function is also supported. it will automatically generate 2 clock period of high level to accelerate conversion when output transfer from low level to high level.

Ports P0-P3 support pure input, push-pull output and standard bi-direction modes, P4 supports pure input and push-pull output modes. There are controllable internal pull-up resistors attached to VDD33 and protection diodes attached to GND for all pins.

Figure 10.2.1 shows pins p1.x of P1, also suitable for ports P0, P2 and P3 without P1_IE, AIN or ADC_CHANN.

Figure 10.2.1 Equivalent schematic diagram of I/O pins

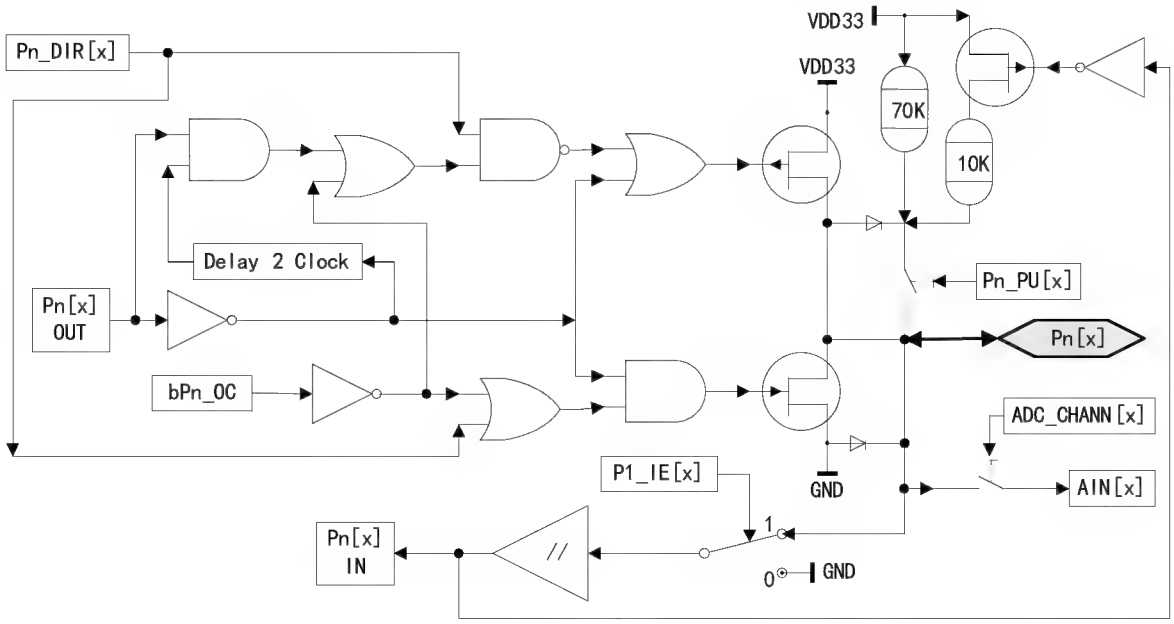

P1 input enable register (P1_IE):

Bit	Name	Access	Description	Reset value
[7:0]	P1_IE	RW	Pin P1.x input enable 0 = Enable ADC analog input, and disable digital input. 1 = Enable digital input.	FFh

10.3 P4 Port

P4 output register (P4_OUT):

Bit	Name	Access	Description	Reset value
[7:0]	P4_OUT.0～P4_OUT.7	RW	Pin P4.x data output bit, support addressing by bit	00h

P4 input register (P4_IN):

Bit	Name	Access	Description	Reset value
[7:0]	P4_IN	RO	Pin P4.x state input bit	FFh

P4 pull-up enable register (P4_PU):

Bit	Name	Access	Description	Reset value
[7:0]	P4_PU	RW	Pin P4.x pull-up resistor enable 0 = Pull-up resistor disabled. 1 = Pull-up resistor enabled.	FFh

P4 direction control register (P4_DIR):

Bit	Name	Access	Description	Reset value
[7:0]	P4_DIR	RW	Pin P4.x direction setting: 0 = Input. 1 = Output.	00h

P4 configuration register (P4_CFG) and P5 input register (P5_IN):

Bit	Name	Access	Description	Reset value
7	P5.7	R0	Pin P5.7 state input bit	0
6	bIO_INT_ACT	R0	GPIO interrupt request activation state: When bIE_IO_EDGE=0: 1 = There is valid GPIO input level and interrupt occurs. 0 = Invalid input level. When bIE_IO_EDGE=1, it is used as edge interrupt flag: 1 = A valid edge is detected, it cannot be reset by software and only can be reset automatically when reset or interrupt program is running in level interrupt mode.	0
5	P5.5	R0	Pin P5.5 state input bit, pull-down resistor inside when in non-iRS485 mode	0
4	P5.4	R0	Pin P5.4 state input bit, pull-down resistor inside when in non-iRS485 mode	0
3	bSPI0_PIN_X	RW	SPI0 SCS/SCK mapping enable 0 = Enable P1.4/P1.7. 1 = Enable P4.6/P4.7.	0
2	bP4_DRV	RW	P4 output ability select: 0 = Driving current is 5mA level. 1= Driving current is 20mA level.	0
1	P5.1	R0	Pin P5.1 state input bit, controllable pull-down resistor inside	0
0	P5.0	R0	Pin P5.0 state input bit, controllable pull-down resistor inside	0

10.4 GPIO Alternate Functions and Mapping

Some I/O pins of CH558 have alternate functions and are general I/O pins when powered, they are set corresponding pins if used as different function modules.

Pin function selection register (PIN_FUNC):

Bit	Name	Access	Description	Reset value
7	Reserved	RO	Reserved	0
6	bTMR3_PIN_X	RW	Pin PWM3/CAP3 mapping enable bit: 0 = PWM3/CAP3 enable P1.2. 1 = PWM3/CAP3 enable p4.2.	0
5	bT2EX_PIN_X	RW	Pin T2EX/CAP2 mapping enable bit: 0 = T2EX/CAP2 enable P1.1. 1 = T2EX/CAP2 enable P2.5.	0
4	bUART0_PIN_X	RW	Pin UART0 mapping enable bit: 0 = RXD0/TXD0 enable P3.0/P3.1. 1 = RXD0/TXD0 enable P0.2/P0.3.	0
3	bXBUS_EN	RW	XBUS function enable bit: 0 = Disable xbus. 1 = P0 used as 8-bit data bus and P3.6/P3.7 used as read/write select during bus access.	0
2	bXBUS_CS_OE	RW	XBUS chip selection output enable bit: 0 = Disable chip selection output, and it can be decoded by external circuit. 1 = P3.4 used as output of CS0 (XSC0 is 0, active low), bus address A15 is inverted and exported to P3.3 when	0

			ALE is disabled (CS is 1, active low).	
1	bXBUS_AH_OE	RW	XBUS address high 8 bits output enable bit: 0 = Output is disabled. 1 = P2 outputs bus address high 8 bits during MOVX_@DPTR command access to external bus.	0
0	bXBUS_AL_OE	RW	XBUS address low 8 bits output enable bit: 0 = Reusable address mode, it outputs address low 8 bits or data according to demand when access to external bus, latched by external circuit controlled by ALE. 1 = Direct address mode, it outputs address low 8 bits A0-A7 by P4.0-P4.5, P3.5 and P2.7.	0

Table 10.4.1 List of GPIO pins alternate functions

GPIO	Other functions: left-to-right priority
P0[0]	AD0, UDTR/bUDTR, P0.0
P0[1]	AD1, URTS/bURTS, P0.1
P0[2]	AD2, RXD_/bRXD_, P0.2
P0[3]	AD3, TXD_/bTXD_, P0.3
P0[4]	AD4, UCTS/bUCTS, P0.4
P0[5]	AD5, UDSR/bUDSR, P0.5
P0[6]	AD6, URI/bURI, P0.6
P0[7]	AD7, UDCD/bUDCD, P0.7
P1[0]	AIN0, T2/bT2, CAP1/bCAP1, P1.0
P1[1]	AIN1, T2EX/bT2EX, CAP2/bCAP2, P1.1
P1[2]	AIN2, PWM3/bPWM3, CAP3/bCAP3, P1.2
P1[3]	AIN3, P1.3
P1[4]	AIN4, SCS/bSCS, P1.4
P1[5]	AIN5, MOSI/bMOSI, P1.5
P1[6]	AIN6, MISO/bMISO, P1.6
P1[7]	AIN7, SCK/bSCK, P1.7
P2[0]	A8, P2.0
P2[1]	A9, P2.1
P2[2]	A10, P2.2
P2[3]	A11, P2.3
P2[4]	A12, P2.4
P2[5]	TNOW/bTNOW, A13, T2EX_/bT2EX_, CAP2_/bCAP2_, P2.5
P2[6]	RXD1/bRXD1, A14, P2.6
P2[7]	TXD1/bTXD1, DA7/bDA7, A15, P2.7
P3[0]	RXD/bRXD, P3.0
P3[1]	TXD/bTXD, P3.1
P3[2]	LED0/bLED0, INT0/bINT0, P3.2
P3[3]	LED1/bLED1, !A15, INT1/bINT1, P3.3
P3[4]	LEDC/bLEDC, XCS0/bXCS0, T0/bT0, P3.4
P3[5]	DA6/bDA6, T1/bT1, P3.5

P3[6]	WR/bWR, P3.6
P3[7]	RD/bRD, P3.7
P4[0]	LED2/bLED2, A0, RXD1_/bRXD1_, P4.0
P4[1]	A1, P4.1
P4[2]	PWM3_/bPWM3_, CAP3_/bCAP3_, A2, P4.2
P4[3]	A3, P4.3
P4[4]	LED3/bLED3, TNOW_/bTNOW_, TXD1_/bTXD1_, A4, P4.4
P4[5]	A5, P4.5
P4[6]	XI, SCS_/bSCS_, P4.6
P4[7]	XO, SCK_/bSCK_, P4.7
P5[0]	DM/bDM, P5.0
P5[1]	DP/bDP, P5.1
P5[4]	ALE, XB, P5.4
P5[5]	!A15, XA, P5.5
P5[7]	RST/bRST, P5.7

The left-to-right priority shown in table above is the priority of some modules competing for using GPIO. For example, P2 has been set output bus address high 8 bits but only A8～A13 addresses are actually used, P2.6 can still be used as RXD1 in higher priority, and P2.7 can still be used as TXD1 or DA7 and other functions in higher priority, so the waste of P2.6 and P2.7 can be avoided when A14~A15 addresses are not used.

11. External Bus (xBUS)

11.1 External Bus Register

External bus auxiliary configuration register (XBUS_AUX):

Bit	Name	Access	Description	Reset value
7	bUART0_TX	R0	UART0 Tx state instruction: 1 = it is transmitting.	0
6	bUART0_RX	R0	UART0 Rx state instruction: 1 = it is receiving.	0
5	bSAFE_MOD_ACT	R0	Safe mode state instruction: 1 = it is in safe mode.	0
4	bALE_CLK_EN	RW	Pin ALE clock output enable: 1 = ALE outputs system frequency divided by 12 without XBUS operation, that is Fsys/12. 0 = Clock signal is disabled, it only outputs address low 8 bits latch signal while access to external bus to reduce EMI.	0
3	GF2	RW	General flag bit2: User-defined. Can be reset or set by software.	0
2	bDPTR_AUTO_INC	RW	Enable DPTR add by 1 automatically after MOVX_@DPTR command	0
1	Reserved	RO	Reserved	0
0	DPS	RW	Dual DPTR data pointer select bit: 0 = DPTR0. 1 = DPTR1.	0

External bus speed configuration register (XBUS_SPEED):

Bit	Name	Access	Description	Reset value
7	bXBUS1_SETUP	RW	XBUS1 setup time selection: 0 = 2 clock period. 1 = 3 clock period	1
6	bXBUS1_HOLD	RW	XBUS1 hold time selection: 0 = 1 clock period. 1 = 2 clock period.	1
5	bXBUS1_WIDTH1	RW	XBUS1 bus pulse width high bit	1
4	bXBUS1_WIDTH0	RW	XBUS1 bus pulse width low bit	1
3	bXBUS0_SETUP	RW	XBUS0 setup time selection: 0 = 2 clock period. 1 = 3 clock period.	1
2	bXBUS0_HOLD	RW	XBUS0 hold time selection: 0 = 1 clock period. 1 = 2 clock period.	1
1	bXBUS0_WIDTH1	RW	XBUS0 bus pulse width high bit	1
0	bXBUS0_WIDTH0	RW	XBUS0 bus pulse width low bit	1

bXBUSn_WIDTH1 and bXBUSn_WIDTH0 (n=0 or 1), used to select valid pulse width of bus CS reading and writing:

00 = 2 clock period.

01 = 4 clock period.

10 = 8 clock period.

11 = 16 clock period.

11.2 External Bus Pins

Table 11.2.1 List of external bus pins

GPIO	Direct address mode pin	Alternate address mode pin	Function description
P3.7	RD	RD	External bus read signal output pin, active low, sampling input while rising edge
P3.6	WR	WR	External bus write signal output pin, active low
P0.0～P0.7	D0～D7	D0～D7	8-bit bidirectional data bus
		A0～A7	Reused as address low 8 bits A[0:7] output, latched by external circuit controlled by ALE
P4.0～P4.5	A0～A5	unused	Bus direct address A[0:5] output pin, P4_DIR must be set output.
P3.5	A6	unused	Bus direct address A6 output pin
P2.7	A7		Bus direct address A7 output pin
		A15	Bus address A15 output pin
P2.0～P2.6	A8～A14	A8～A14	Bus address A[8:14] output pin
P3.4	XCS0	XCS0	CS0 output pin, address ranges from 4000h to 7FFFh, active low
P3.3	!A15	!A15	Bus address A15 invert output pin, equivalent to CS1 output, address ranges from 8000h to FFFFh, active low, only in ALE disable mode
P5.5	!A15	!A15	Bus address A15 invert output pin, equivalent to CS1 output, address ranges from 8000h to FFFFh, active low, only in ALE enable mode
P5.4		ALE	Address low 8 bits latch control reuse output pin, active high

	ALE		System frequency divided by 12 output pin, duty cycle is 1/12

Some of the pins above that are not used in external bus mode can be used for other modules according to GPIO alternate priority, and pins not used from P4.0 to P4.5 can also be set P4_DIR hold input mode.

When bXBUS_CS_OE=1, bus address A15 invert signal will select output pin according to ALE output mode. !A15 will select P5.5 to output when ALE output is enabled, and select P3.3 to output when ALE output is disabled. ALE output state is decided by bXBUS_EN, bXBUS_AL_OE combined with bALE_CLK_EN. Please refer to Table 11.2.2.

Table 11.2.2 P5.4 pin reuse ALE output state table

bXBUS_EN	bXBUS_AL_OE	bALE_CLK_EN	P5.4 description
0	X	0	Disable ALE output, used as XB acquiescently (P5.5 used as XA)
0	X	1	ALE only outputs system clock signal divided by 12
1	1	0	Disable ALE output, used as XB acquiescently (P5.5 used as XA)
1	1	1	ALE only outputs system clock signal divided by 12
1	0	0	ALE only outputs address latch signal low 8 bits on bus
1	0	1	ALE outputs address latch signal low 8 bits when accessing the bus, outputs system clock signal divided by 12 during idle time

12. Timer

12.1 Timer0/1

Timer0 and Timer1 are 2 16-bit timers and counters, which are configured by registers TCON and TMOD. TCON is used for start-up control, overflow interrupt and external interrupt control of T0 and T1. Each timer is 16-bit consist of two 8-bit units, high byte of timer0 is THO, and low byte is TL0. High byte of timer1 is TH1, and low byte is TL1. Timer1 may also be used for UART0 baud rate generator.

Table 12.1.1 List of Timer0/1 registers

Name	Address	Description	Reset value
TH1	8Dh	High byte of Timer1 count	xxh
TH0	8Ch	High byte of Timer0 count	xxh
TL1	8Bh	Low byte of Timer1 count	xxh
TL0	8Ah	Low byte of Timer0 count	xxh
TMOD	89h	Timer0/1 mode register	00h
TCON	88h	Timer0/1 control register	00h

Timer/counter 0/1 control register (TCON):

Bit	Name	Access	Description	Reset value
7	TF1	RW	Timer1 overflow interrupt flag bit. Automatically cleared after entry of Timer1 interrupt service.	0
6	TR1	RW	Timer1 start/stop bit. Set 1 to start. Set and reset by software.	0
5	TF0	RW	Timer0 overflow interrupt flag bit. Automatically cleared after entry of Timer0 interrupt service.	0
4	TR0	RW	Timer0 start/stop bit. Set 1 to start. Set and reset by software.	0
3	IE1	RW	INT1 interrupt flag. Automatically cleared when MCU enters interrupt routine.	0

2	IT1	RW	INT1 interrupt type: 0 = Low level action. 1 = Falling edge action.	0
1	IE0	RW	INT0 interrupt flag. Automatically cleared when MCU enters interrupt routine.	0
0	IT0	RW	INT0 interrupt type: 0 = Low level action. 1 = Falling edge action.	0

Timer/counter 0/1 mode register (TMOD):

Bit	Name	Access	Description	Reset value
7	bT1_GATE	RW	Gate control timer1: 0 = Whether Timer1 is started is independent of INT1. 1 = Timer1 run enable while P3.3 (INT1) pin is high and TR1 is 1.	0
6	bT1_CT	RW	Counter or timer mode selection for timer1: 0 = Timer mode. 1 = Counter mode, use P3.5 (T1) pin falling edge as clock	0
5	bT1_M1	RW	Timer1 mode high bit	0
4	bT1_M0	RW	Timer1 mode low bit	0
3	bT0_GATE	RW	Gate control timer0: 0 = Whether Timer0 is started is independent of INT0. 1 = Timer0 run enable while P3.2 (INT0) pin is high and TR0 is 1.	0
2	bT0_CT	RW	Counter or timer mode selection for timer0: 0 = Timer mode. 1 = Counter mode, use P3.4 (T0) pin falling edge as clock	0
1	bT0_M1	RW	Timer0 mode high bit	0
0	bT0_M0	RW	Timer0 mode low bit	0

Table 12.1.2 List of Timern working mode (n=0,1)

bTn_M1	bTn_M0	Timern working mode (n=0,1)
0	0	Mode0: 13-bit timer/counter n by cascaded THn and lower 5 bits of TLn, the upper 3 bits of TLn are ignored. When the counts of all 13 bits change from 1 to 0, set the overflow flag TFn and reset the initial value.
0	1	Mode1: 16-bit timer/counter n by cascaded THn and TLn. When the counts of all 16 bits change from 1 to 0, set the overflow flag TFn and reset the initial value.
1	0	Mode2: 8-bit overload timer/counter n, TLn is used for count unit, and THn is used as the overload count unit. When the counts of all 8 bits change from 1 to 0, set the overflow flag TFn and automatically load the initial value from THn.
1	1	Mode3: For Timer0, it is divided into TL0 and TH0. TL0 is used as 8-bit timer/counter, occupying all control bits of Timer0. TH0 is also used as an 8-bit timer, occupying TR1, TF1 and interrupt resources of Timer1. In this case, Timer1 is still available, but the startup control bit TR1 and overflow flag bit TF1 cannot be used. For Timer1, it stops after it enters mode3.

Timern count low byte (TLn) (n=0, 1):

Bit	Name	Access	Description	Reset value
[7:0]	TLn	RW	Timern count low byte	xxh

Timern count high byte (THn) (n=0, 1):

Bit	Name	Access	Description	Reset value
[7:0]	THn	RW	Timern count high byte	xxh

12.2 Timer2

Timer2 is a 16-bit auto-reload timer and counter, configured by registers T2CON and T2MOD, high byte of Timer2 is TH2, and low is TL2. Timer2 may be used for baud rate generator for UART0, and provide 2 level capture which capture value stored in registers RCAP2 and T2CAP1.

Table 12.2.1 List of Timer2 registers

Name	Address	Description	Reset value
TH2	CDh	Timer2 count high byte	00h
TL2	CCh	Timer2 count low byte	00h
T2COUNT	CCh	16-bit SFR consists of TL2 and TH2	0000h
T2CAP1H	CDh	Timer2 capture 1 data high byte (read only)	xxh
T2CAP1L	CCh	Timer2 capture 1 data low byte (read only)	xxh
T2CAP1	CCh	16-bit SFR consists of T2CAP1L and T2CAP1H	xxxxh
RCAP2H	CBh	Count reload/capture 2 data high byte	00h
RCAP2L	CAh	Count reload/capture 2 data low byte	00h
RCAP2	CAh	16-bit SFR consists of RCAP2L and RCAP2H	0000h
T2MOD	C9h	Timer2 mode register	00h
T2CON	C8h	Timer2 control register	00h

Timer/counter2 control register (T2CON):

Bit	Name	Access	Description	Reset value
7	TF2	RW	Timer2 overflow interrupt flag when bT2_CAP1_EN=0. Set it to 1 when the counts of all 16 bits of Timer2 change from 1 to 0. Reset by software. This bit will not be set when either RCLK=1 or TCLK=1.	0
7	CAP1F	RW	Timer2 capture 1 interrupt flag when bT2_CAP1_EN=1, set by T2 edge trigger, reset by software.	0
6	EXF2	RW	Timer2 external trigger flag, set by T2EX edge trigger if EXEN2=1, reset by software.	0
5	RCLK	RW	Select UART0 receiving clock: 0 = Timer1 overflow pulse. 1 = Timer2 overflow pulse.	0
4	TCLK	RW	Select UART0 transmittal clock: 0 = Timer1 overflow pulse. 1 = Timer2 overflow pulse.	0
3	EXEN2	RW	Enable T2EX trigger function: 0 = Ignore T2EX. 1 = Enable trigger reload or capture by T2EX edge.	0
2	TR2	RW	Timer2 startup/stop bit, set 1 to start, set or reset by software.	0
1	C_T2	RW	Timer2 clock source selection: 0 = Timer base internal clock. 1 = External edge counter base T2 falling edge.	0

0	CP_RL2	RW	Timer2 function selection (force 0 if RCLK = 1 or TCLK = 1): 0 = Timer and auto reload if count overflow or T2EX edge. 1 = Capture by T2EX edge.	0

Timer/counter2 mode register (T2MOD):

Bit	Name	Access	Description	Reset value
7	bTMR_CLK	RW	Fastest internal clock mode for T0/T1/T2 under faster clock mode: 0 = Use divided clock. 1 = Use original Fsys as clock without dividing. This bit has no effect on selecting standard clock timer	0
6	bT2_CLK	RW	Timer2 internal clock frequency selection: 0 = Standard clock, Fsys/12 for timer mode, Fsys/4 for UART0 clock mode. 1 = Faster clock, Fsys/4 @bTMR_CLK = 0 or Fsys @bTMR_CLK = 1 for timer mode, Fsys/2 @bTMR_CLK = 0 or Fsys @bTMR_CLK = 1 for UART0 clock mode	0
5	bT1_CLK	RW	Timer1 internal clock frequency selection: 0 = Standard clock, Fsys/12. 1 = Faster clock, Fsys/4 if bTMR_CLK = 0, or Fsys if bTMR_CLK = 1.	0
4	bT0_CLK	RW	Timer0 internal clock frequency selection: 0 = Standard clock, Fsys/12. 1 = Faster clock, Fsys/4 if bTMR_CLK = 0, or Fsys if bTMR_CLK = 1.	0
3	bT2_CAP_M1	RW	Timer2 capture mode high bit Timer2 capture mode selection: X0: from falling edge to falling edge. 01: from any edge to any edge (level change). 11: from rising edge to rising edge.	0
2	bT2_CAP_M0	RW	Timer2 capture mode low bit	0
1	T2OE	RW	Timer2 clock output enable: 0 = Disable output. 1 = Enable clock output at T2 pin, frequency = TF2/2.	0
0	bT2_CAP1_EN	RW	Enable T2 trigger function for capture 1 of timer2 if RCLK=0, TCLK=0, CP_RL2=1, C_T2=0, T2OE=0: 1 = Enable capture 1 function to capture T2 valid edge. 0 = Disable capture 1.	0

Count reload/capture 2 data register (RCAP2):

Bit	Name	Access	Description	Reset value
[7:0]	RCAP2H	RW	High byte of reload value in timer/counter mode. High byte of timer captured by CAP2 in capture mode.	00h
[7:0]	RCAP2L	RW	Low byte of reload value in timer/counter mode. Low byte of timer captured by CAP2 in capture mode	00h

Timer2 counter (T2COUNT), only valid when bT2_CAP1_EN=0:

Bit	Name	Access	Description	Reset value

[7:0]	TH2	RW	High byte of timer2	00h
[7:0]	TL2	RW	Low byte of timer2	00h

Timer2 capture 1 data (T2CAP1), only valid when bT2_CAP1_EN=1:

Bit	Name	Access	Description	Reset value
[7:0]	T2CAP1H	RO	High byte of timer captured by CAP1	xxh
[7:0]	T2CAP1L	RO	Low byte of timer captured by CAP1	xxh

12.3 Timer3

Table 12.3.1 List of Timer3 registers

Name	Address	Description	Reset value
T3_FIFO_H	AFh	Timer3 FIFO high byte	xxh
T3_FIFO_L	AEh	Timer3 FIFO low byte	xxh
T3_FIFO	AEh	16-bit SFR consists of T3_FIFO_L and T3_FIFO_H	xxxxh
T3_DMA_AH	ADh	DMA address high byte	0xh
T3_DMA_AL	ACh	DMA address low byte	xxh
T3_DMA	ACh	16-bit SFR consists of T3_DMA_AL and T3_DMA_AH	0xxxh
T3_DMA_CN	ABh	DMA remainder word count register	00h
T3_CTRL	AAh	Timer3 control register	02h
T3_STAT	A9h	Timer3 status register	00h
T3_END_H	A7h	Timer3 count end value high byte	xxh
T3_END_L	A6h	Timer3 count end value low byte	xxh
T3_END	A6h	16-bit SFR consists of T3_END_L and T3_END_H	xxxxh
T3_COUNT_H	A5h	Timer3 current count high byte (read only)	00h
T3_COUNT_L	A4h	Timer3 current count low byte (read only)	00h
T3_COUNT	A4h	16-bit SFR consists of T3_COUNT_L and T3_COUNT_H	0000h
T3_CK_SE_H	A5h	Timer3 clock divisor setting high byte	00h
T3_CK_SE_L	A4h	Timer3 clock divisor setting low byte	20h
T3_CK_SE	A4h	16-bit SFR consists of T3_CK_SE_L and T3_CK_SE_H	0020h
T3_SETUP	A3h	Timer3 setup register	04h

Timer3 setup register (T3_SETUP):

Bit	Name	Access	Description	Reset value
7	bT3_IE_END	RW	1 = Enable interrupt for capture mode count timeout (exceed end value) or PWM mode cycle end. 0 = Disable.	0
6	bT3_IE_FIFO_OV	RW	1 = Enable interrupt for FIFO overflow. 0 = Disable.	0
5	bT3_IE_FIFO_REQ	RW	1 = Enable interrupt for capture mode FIFO > = 4 or PWM mode FIFO < = 3. 0 = Disable.	0
4	bT3_IE_ACT	RW	1 = Enable interrupt for capture mode input action or PWM mode trigger. 0 = Disable.	0

3	Reserved	RO	Reserved	0
2	bT3_CAP_IN	RO	Current capture input level after noise filtrating	1
1	bT3_CAP_CLK	RW	1 = Force no minimum pulse width limit for capture input. Only valid when T3_CK_SE = 1. Used for high-speed signal capture.	0
0	bT3_EN_CK_SE	RW	1 = Enable to accessing divisor setting register. 0 = Enable to accessing current count register.	0

Timer3 current count register (T3_COUNT), only valid when bT3_EN_CK_SE=0:

Bit	Name	Access	Description	Reset value
[7:0]	T3_COUNT_H	RO	Timer3 current count high byte	00h
[7:0]	T3_COUNT_L	RO	Timer3 current count low byte	00h

Timer3 clock divisor setting register (T3_CK_SE), valid only when bT3_EN_CK_SE=1:

Bit	Name	Access	Description	Reset value
[7:0]	T3_CK_SE_H	RW	Timer3 clock divisor setting high byte, lower 4 bits valid only, higher 4 bits are fixed to 0.	00h
[7:0]	T3_CK_SE_L	RW	Timer3 clock divisor low byte	20h

Timer3 count end value register (T3_END):

Bit	Name	Access	Description	Reset value
[7:0]	T3_END_H	RW	Timer3 count end value high byte	xxh
[7:0]	T3_END_L	RW	Timer3 count end value low byte	xxh

Timer3 status register (T3_STAT):

Bit	Name	Access	Description	Reset value
7	bT3_IF_DMA_END	RW	Interrupt flag for DMA completion: 1 = There is an interrupt. 0 = No interrupt. Write 1 to clear or write T3_DMA_CN to clear.	0
6	bT3_IF_FIFO_OV	RW	1 = FIFO overflow interrupt. 0 = No interrupt. Write 1 to clear.	0
5	bT3_IF_FIFO_REQ	RW	1 = Interrupt flag for request FIFO data (capture mode FIFO > = 4 or PWM mode FIFO < = 3) 0 = No interrupt. Write 1 to clear.	0
4	bT3_IF_ACT	RW	When bT3_IE_ACT=1: 1 = Interrupt flag for capture mode input action or PWM mode trigger. 0 = No interrupt. Write 1 to clear or access FIFO to clear.	0
4	bT3_IF_END	RW	When bT3_IE_ACT=0: 1 = Interrupt flag for capture mode count timeout (exceed end value) or PWM mode cycle end. 0 = No interrupt. Write 1 to clear.	0

[3:0]	MASK_T3_FIFO_CNT	R0	Timer3 FIFO current count	0000b

Timer3 control register (T3_CTRL):

Bit	Name	Access	Description	Reset value
7	bT3_CAP_M1	RW	Timer3 capture mode high bit; PWM data repeat mode high bit	0
6	bT3_CAP_M0	RW	Timer3 capture mode low bit; PWM data repeat mode high bit	0
5	bT3_PWM_POLAR	RW	Timer3 PWM output polarity: 0 = Default low and active high. 1 = Default high and active low.	0
5	bT3_CAP_WIDTH	RW	Minimum pulse width for timer3 capture: 0 = 4 divided clocks. 1 = 1 divided clock.	0
4	bT3_DMA_EN	RW	DMA enable and DMA interrupt enable for timer3: 1 = Enable. 0 = Disable.	0
3	bT3_OUT_EN	RW	Timer3 output enable: 1 = Enable. 0 = Disable.	0
2	bT3_CNT_EN	RW	Timer3 count enable: 1 = Enable. 0 = Disable.	0
1	bT3_CLR_ALL	RW	1 = Force clear FIFO and count of timer3. Reset by software.	1
0	bT3_MOD_CAP	RW	Timer3 mode: 0 = Timer or PWM. 1 = Capture.	0

Note: Timer3 capture point selection in capture mode: bT3_CAP_M1 & bT3_CAP_M0:

00 = Disable capture;

01 = Trigger by any edge, capture from any edge to any edge (level change);

10 = Trigger by falling edge, capture from falling edge to falling edge;

11 = Trigger by rising edge, capture from rising edge to rising edge.

Data repeater times in PWM mode: bT3_CAP_M1 & bT3_CAP_M0:

00 = 1 times;

01 = 4 times;

10 = 8 times;

11 = 16 times.

DMA remainder word count register (T3_DMA_CN):

Bit	Name	Access	Description	Reset value
[7:0]	T3_DMA_CN	RW	DMA remainder word count, support preset initial value, automatic decreasing after DMA.	00h

DMA address register (T3_DMA):

Bit	Name	Access	Description	Reset value
[7:0]	T3_DMA_AH	RW	DMA address high byte, support preset initial value, automatically increasing after DMA, low 4 bits valid only,	0xh

			high 4 bits are fixed to 0.	
[7:0]	T3_DMA_AL	RW	DMA address low byte, support preset initial value, automatic increasing after DMA, high 7 bits valid only, low bit is fixed to 0, support even address only	xxh

FIFO register (T3_FIFO):

Bit	Name	Access	Description	Reset value
[7:0]	T3_FIFO_H	RW	Timer3 FIFO high byte	xxh
[7:0]	T3_FIFO_L	RW	Timer3 FIFO low byte	xxh

12.4 PWM

CH558 Timer3 supports 16-bit PWM. Support default output setting low-level or high-level, modify duty cycle dynamically, and get the wanted after a simple RC circuit just like a low-speed DAC.

PWM duty cycle = T3_FIFO / T3_END, from 0% to 100%. If T3_FIFO > T3_END, PWM duty cycle = 100%.

Suggestion: enable PWM output and set push-pull in application.

12.5 Timer

12.5.1 Timer0/1

(1) Set timer internal clock frequency by T2MOD. Timer0/1 frequency is Fsys/12 when bTn_CLK (n=0/1) = 0 , Fsys/4 when bTMR_CLK = 0 and Fsys when bTMR_CLK = 1 if bTn_CLK = 1.

(2) Set Timer working mode by TMOD.

Mode0: 13-bit timer/counter

Figure 12.5.1.1 Timer0/1 mode0

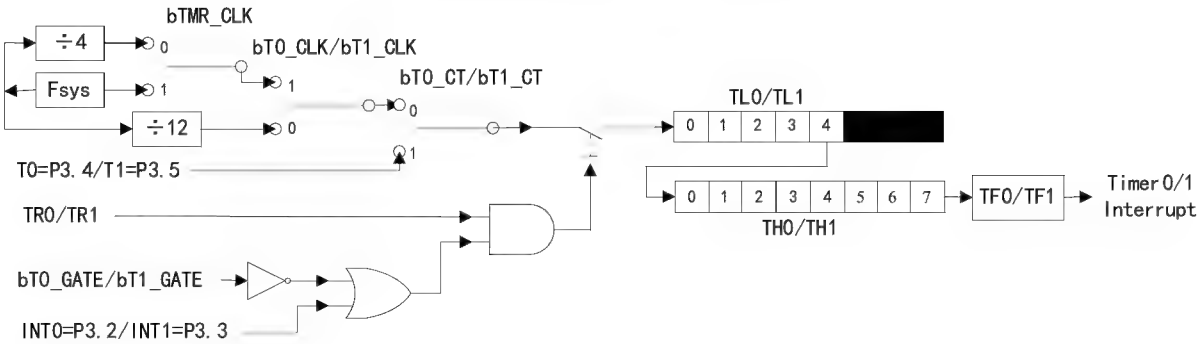

Mode1: 16-bit timer/counter

Figure 12.5.1.2 Timer0/1 mode1

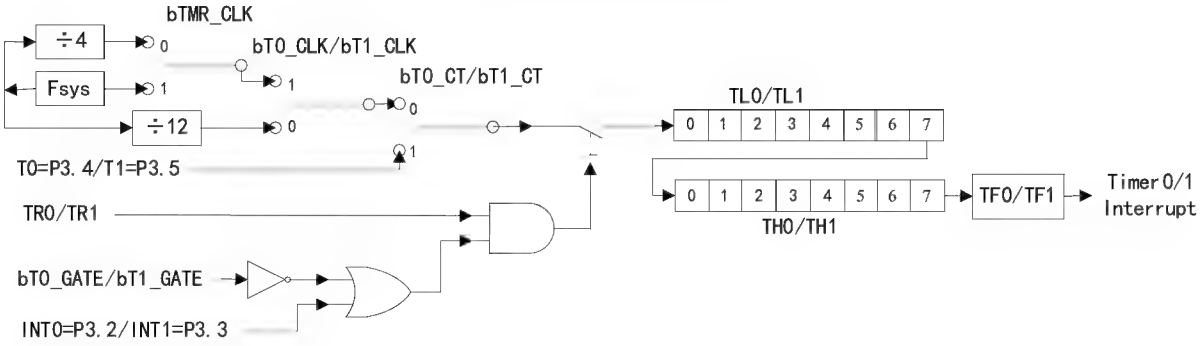

Mode2: auto reload 8-bit timer/counter

Figure 12.5.1.3 Timer0/1 mode2

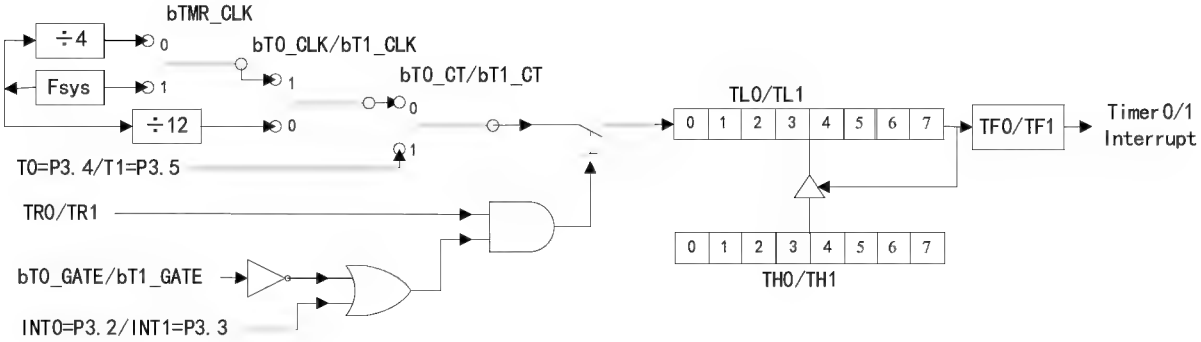

Mode3: Timer0 is divided into 2 seperate 8-bit timer/counter, and borrowed TR1 of Timer1. Timer1 substitutes the borrowed TR1 control bit by whether starting mode3. Timer1 stops when it gets into mode3.

Figure 12.5.1.4 Timer0 mode3

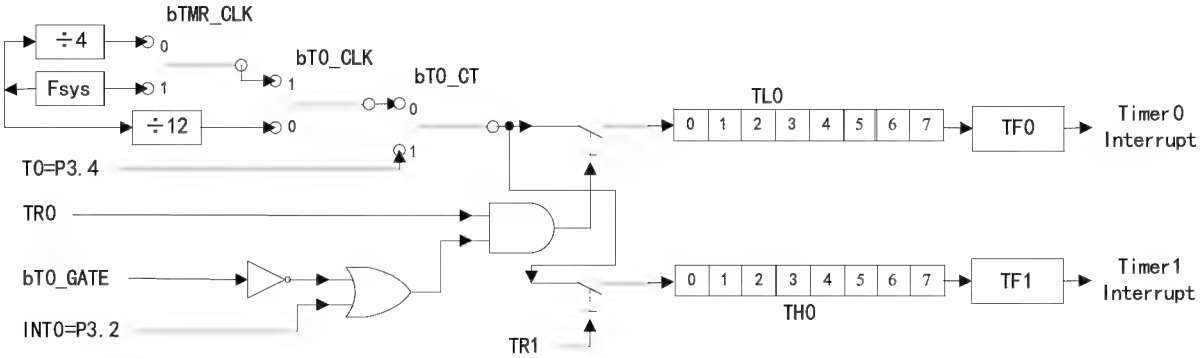

(3) Set timer/counter initial value TLn and THn (n = 0/1).

(4) Set TRn (n = 0/1) in TCON to enable or disable timer/counter, and query status through TFn (n = 0/1).

12.5.2 Timer2

Timer2 16-bit reload timer/counter mode:

(1) Clear RCLK and TCLK in T2CON, select non-baud rate generator mode.

(2) Clear C_T2 in T2CON to use internal clock, jump to step(3); or set it to 1 to use pin T2 falling-edge as count

clock, skip step (3).

(3) Set T2MOD to select Timer internal clock. Timer2 frequency is Fsys/12 when bT2_CLK = 0, Fsys/4 when bTMR_CLK = 0 and Fsys when bTMR_CLK = 1 if bT2_CLK = 1.

(4) Clear CP_RL2 in T2CON, to select Timer2 16-bit reload timer /counter function.

(5) Set RCAP2L and RCAP2H as reload value when timer overflow, and TL2 and TH2 initial value (generally the same as RCAP2L and RCAP2H), set TR2 to 1 to enable Timer2.

(6) Query TF2 or Timer2 interrupt to get current timer/counter status.

Figure 12.5.2.1 Timer2 16-bit reload timer/counter

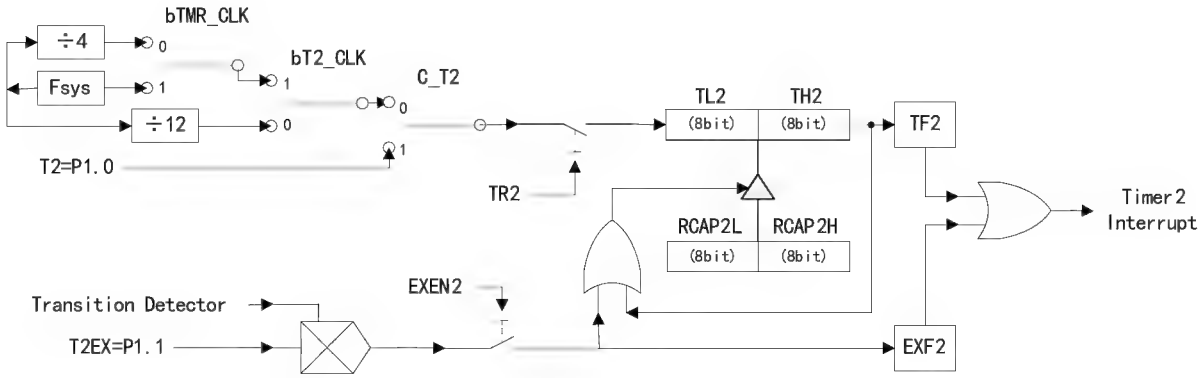

Timer2 clock output mode:

Refer to 16-bit reload timer/counter mode, set T2OE in T2MOD to 1 to enable pin T2 output clock of half TF2 frequency.

Timer2 UART0 baud rate generator mode:

(1) Clear C_T2 in T2CON to enable internal clock, or set it to 1 to set T2 falling-edge as clock, select baud rate mode according to RCLK and TCLK in T2CON.

(2) Set T2MOD to select Timer internal clock. Timer2 frequency is Fsys/4 when bT2_CLK is 0, Fsys/2 when bTMR_CLK=0 and Fsys when bTMR_CLK=1 if bT2_CLK=1.

(3) Set RCAP2L and RCAP2H as reload value when timer overflow, set TR2 to 1 to enable Timer2.

Figure 12.5.2.2 Timer2 UART0 baud rate generator

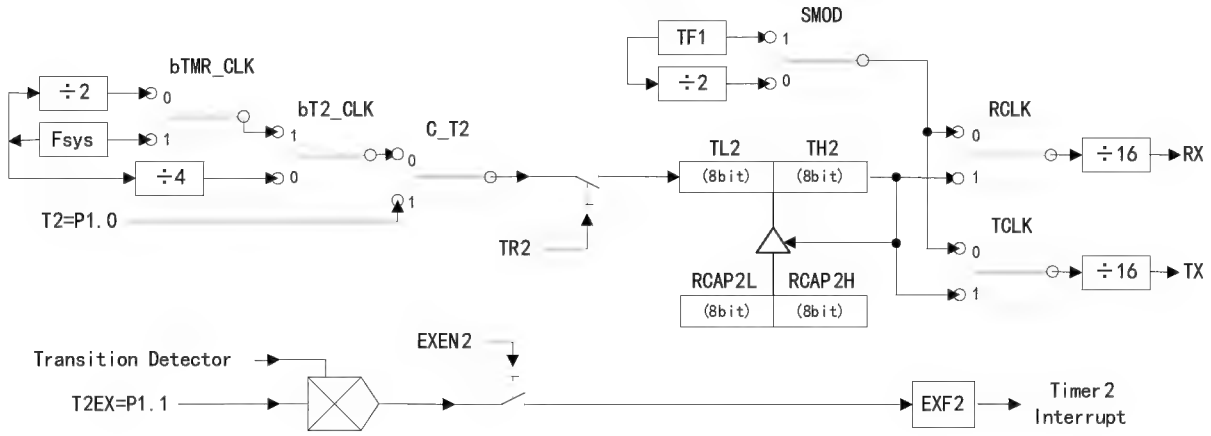

Timer2 dual-channel capture mode:

(1) Clear RCLK and TCLK in T2CON, to select non-baud rate generator mode.

(2) Clear C_T2 in T2CON to enable internal clock, and jump to step (3); or set it to 1 to set T2 falling-edge as

counter clock, and skip step (3).

(3) Set T2MOD to select Timer internal clock. Timer2 frequency is Fsys/12 when bT2_CLK = 0, Fsys/4 when bTMR_CLK = 0 and Fsys when bTMR_CLK = 1 if bT2_CLK = 1.

(4) Set bT2_CAP_M1 and bT2_CAP_M0 in T2MOD to select edge capture mode.

(5) Set CP_RL2 in T2CON to select pin T2EX capture function of Timer2.

(6) Set TL2 and TH2 timer initial value, set TR2 to 1 to enable Timer2.

(7) RCAP2L and RCAP2H keep TL2 and TH2 value, set EXF2 to 1 and trigger interrupt after capture. The signal width of 2 valid edges is the difference between last time capturing of RCAP2L / RCAP2H and next.

(8) If C_T2 = 0 in T2CON and bT2_CAP1_EN = 1 in T2MOD, that will enable Pin T2 capture function, T2CAP1L and T2CAP1H keep TL2 and TH2 value, set CAP1F to 1 to trigger interrupt after capture.

Figure 12.5.2.3 Timer2 capture mode

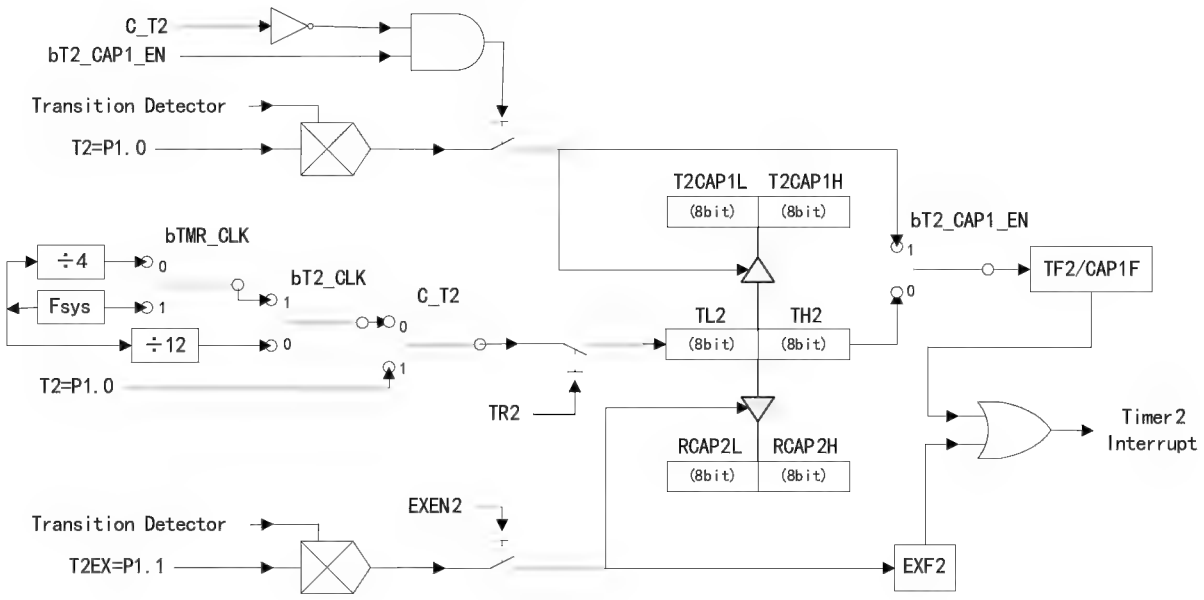

12.5.3 Timer3

(1) Set bT3_EN_CK_SE in T3_SETUP to 1, enable T3_CK_SE, set frequency divisor, timer3 clock is Fsys/T3_CK_SE, clear bT3_EN_CK_SE after setting.

(2) Set T3_END value or PWM cycles.

(3) Enable T3_SETUP as required.

(4) Set control bit of T3_CTRL, select working mode, clear bT3_CLR_ALL, and set bT3_CNT_EN to enable Timer3.

(5) Configure T3_DMA_AL, T3_DMA_AH and T3_DMA_CN as required, and set bT3_DMA_EN to enable DMA.

Figure 12.5.3.1 Timer3 16-bit timer/PWM/capture

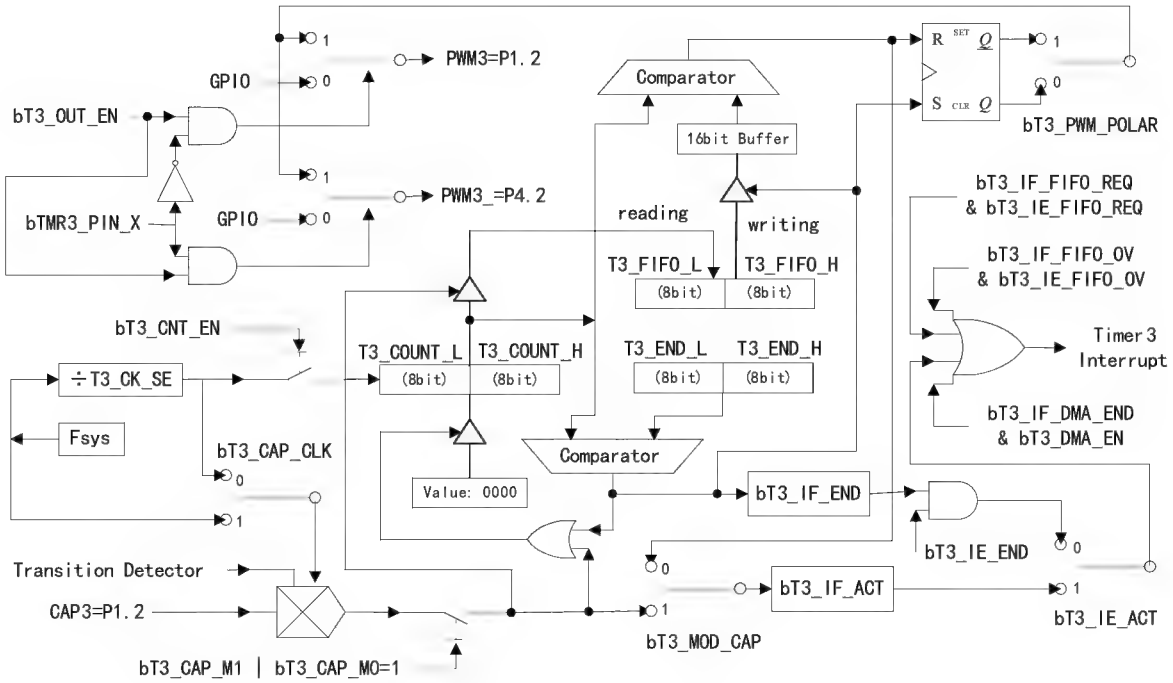

Timer3 capture data format:

Timer3 may capture the width of two valid edges, and the width is shown with the counter of frequency divided and read through DMA or FIFO after or during capturing. it consists of 16 bits, high-bit is a flag and low 15-bit is width counter. After capture enable, data is generated when a valid edge is detected or timer overflows. The first will be dropped since it is not the width between two valid edges.

(1) bT3_CAP_M1 and bT3_CAP_M0=11

Rising edge valid, capture the width from rising-edge to rising-edge. And the width overflow if the highest bit is 1, that mean not found next rising edge after T3_END, and should be added to next width data which highest bit is 0; if the highest bit is 0, that mean the width of last rising edge. In this mode, recommend to set T3_END to detect special super wide and end signal. And the normal signal does not overflow.

For example, set T3_END to 4000h, the original capture data is below:

1234h, 2345h, 0456h, C000h, C000h, 1035h, 3579h, C000h, 2468h, 0987h

After combination: 1234h, 2345h, 0456h, 9035h, 3579h, 6468h, 0987h

(2) BT3_CAP_M1 and bT3_CAP_M0=10

Same with (1), but falling valid, capture the width from falling edge to falling edge.

(3) bT3_CAP_M1 and bT3_CAP_M0=01

Any edge valid, capture the width from any edge to edge. If the high bit is 1, that means the width of high-level, and 0 means the width of low–level. Low 15-bit is width counter. In this mode, set T3_END max value to avoid overflow, but not beyond 15-bit valid data.

13. Universal Asynchronous Receiver Transmitter (UART)

13.1 UART Introduction

The CH558 provides 2 full-duplex UARTs: UART0 and UART1.

UART0 is a standard MCS51 UART, which receives and transmits data with SBUF. Reading for receiving, writing for transmitting.

UART1 is an enhanced UART with following features:

(1) Compatible with 16C550 and enhanced;
(2) Supports 5/6/7/8 data bits and 1/2 stop bits;
(3) Supports odd, even, no parity, space, and mark parity modes;
(4) Programmable baud rate, supports 115200bps and up to 3Mbps;
(5) Built-in receive and transmit buffers and 8-byte FIFO, supports 4 trigger levels;
(6) Supports MODEM: CTS, DSR, RI, DCD, DTR and RTS, can be converted to RS232 level;
(7) Supports hardware flow control signals CTS and RTS auto hand shake and speed control, compatible with TL16C550C;
(8) Supports UART frame error and break detection;
(9) Built-in SIR coding and encoding, supports 2,400bps to 115,200bps IrDA communication;
(10) Supports full-duplex and half-duplex communication, provides transmitting and receiving indicator for RS485;
(11) Built-in half-duplex transceiver, supports multi-device communication like RS485;
(12) Supports preset local address in slave mode, to match data packet over bus in multi-device communication.

13.2 UART Register

Table 13.2.1 List of UART registers

Name	Address	Description	Reset value
SBUF	99h	UART0 data buffer register	xxh
SCON	98h	UART0 control register	00h
SER1_DLL	9Ah	UART1 baud rate divisor latch LSB	xxh
SER1_RBR	9Ah	UART1 receiver buffer register (read-only)	xxh
SER1_THR	9Ah	UART1 transmitter hold register (write-only)	xxh
SER1_FIFO	9Ah	UART1 FIFO register	xxh
SER1_DIV	97h	UART1 prescaler divisor register	xxh
SER1_ADDR	97h	UART1 bus address preset register	FFh
SER1_MSR	96h	UART1 modem status register (read-only)	F0h
SER1_LSR	95h	UART1 line status register (read-only)	60h
SER1_MCR	94h	UART1 modem control register	00h
SER1_LCR	93h	UART1 line control register	00h
SER1_IIR	92h	UART1 interrupt identification register (read-only)	01h
SER1_FCR	92h	UART1 FIFO control register (write-only)	00h
SER1_DLM	91h	UART1 baud rate divisor latch MSB	80h
SER1_IER	91h	UART1 interrupt enable register	00h

13.2.1 UART0 Register Description

UART0 control register (SCON):

Bit	Name	Access	Description	Reset value
7	SM0	RW	UART0 mode bit0, data bit selection:	0

			0 = 8-bit data. 1 = 9-bit data.	
6	SM1	RW	UART0 mode bit1, baud rate selection: 0 = Fixed. 1 = Variable, generated by T1 or T2.	0
5	SM2	RW	UART0 multi-device communication enable: When receiving data in mode2 and mode3: 1 = RI is not set to 1 and the reception is invalid if RB8 is 0; RI is set to 1 and the reception is valid if RB8 is 1. 0 = RI is set when receiving and the reception is valid no matter RB8 is 0 or 1. In mode1: 1 = Reception is only valid when receiving valid stop bit. In mode0, SM2 must be set to 0.	0
4	REN	RW	UART0 receive enable: 0 = Disable. 1 = Enable.	0
3	TB8	RW	The 9th transmitted data bit in mode2/3, can be a parity bit. In multi-device communication, it indicates whether the host transmitts an address byte or a data byte, data byte when TB8=0, and address byte when TB8=1.	0
2	RB8	RW	The 9th bit received data bit in mode2/3. In mode 1, RB8 is used to store the received stop bit if SM2=0. In mode 0, RB8 is not used.	0
1	TI	RW	Transmit interrupt flag, set by hardware after completion of a serial transmittal. Cleared by software.	0
0	RI	RW	Receive interrupt flag, set by hardware after completion of a serial receiving. Cleared by software.	0

Table 13.2.1.1 UART0 working mode

SM0	SM1	Description
0	0	Mode0, shift register, baud rate fixed to: Fsys/12.
0	1	Mode1, 8-bit UART, baud rate = variable by timer1 or timer2 overflow rate.
1	0	Mode2, 9-bit UART, baud rate fixed to: Fsys/128@SMOD=0, Fsys/32@SMOD=1.
1	1	Mode3, 9-bit UART, baud rate = variable by timer1 or timer2 overflow rate.

In mode1 and mode3, UART0 baud rate is generated by T1 when RCLK=0 and TCLK=0. Set T1 in mode2 auto reload 8-bit timer, clear bT1_CT and bT1_GATE, as follow:

Table 13.2.1.2 Calculation formula of UART0 baud rate

bTMR_CLK	bT1_CLK	SMOD	Description
1	1	0	TH1 = 256 - Fsys / 32 / baud rate
1	1	1	TH1 = 256 - Fsys / 16 / baud rate
0	1	0	TH1 = 256 - Fsys / 4 / 32 / baud rate
0	1	1	TH1 = 256 - Fsys / 4 / 16 / baud rate
X	0	0	TH1 = 256 - Fsys / 12 / 32 / baud rate
X	0	1	TH1 = 256 - Fsys / 12 / 16 / baud rate

In mode1 and mode3, UART0 baud rate is generated by T2 when RCLK=1 and TCLK=1. Set T2 in mode2 auto reload 16-bit timer, clear C_T2 and CP_RL2, as follow:

Table 13.2.1.3 Calculation formula of UART0 baud rate

bTMR_CLK	bT2_CLK	Description
1	1	RCAP2 = 65536 - Fsys / 16 / baud rate
0	1	RCAP2 = 65536 - Fsys / 2 / 16 / baud rate
X	0	RCAP2 = 65536 - Fsys / 4 / 16 / baud rate

UART0 data buffer register (SBUF):

Bit	Name	Access	Description	Reset value
[7:0]	SBUF	RW	UART0 data buffer: reading for receiving, writing for transmittal.	xxh

13.2.2 UART1 Register Description

SER1_FIFO consists of 2 physical-separated registers: receive buffer SER1_RBR and transmit buffer SER1_THR.

UART1 receiver buffer register (SER1_RBR), only valid when bLCR_DLAB=0:

Bit	Name	Access	Description	Reset value
[7:0]	SER1_RBR	RO	UART1 receiver buffer register. Read data from the register when bLSR_DATA_RDY in SER1_LSR is 1. If bFCR_FIFO_EN = 1, data in shift register will be stored in receiver first and may be read from this register.	xxh

Data transmitter hold register (SER1_THR), only valid when bLCR_DLAB=0:

Bit	Name	Access	Description	Reset value
[7:0]	SER1_THR	WO	Transmit hold register, include FIFO. Data written will be stored in FIFO first and transmit through SER1_THR one by one if bFCR_FIFO_EN = 1.	xxh

UART1 interrupt enable register (SER1_IER), only valid when bLCR_DLAB=0:

Bit	Name	Access	Description	Reset value
7	bIER_RESET	RW	UART1 software reset control, high action, auto cleared.	0
6	bIER_EN_MODEM_O	RW	Enable UART1 modem output signal 1 = Enable modem signal RTS/DTR output. 0 = Disable.	0
5	bIER_PIN_MOD1	RW	UART1 pin mode high bit	0
4	bIER_PIN_MOD0	RW	UART1 pin mode low bit	0
3	bIER_MODEM_CHG	RW	UART1 interrupt enable for modem status change: 1 = Enable. 0 = Disable.	0
2	bIER_LINE_STAT	RW	UART1 interrupt enable for receiver line status: 1 = Enable. 0 = Disable.	0
1	bIER_THR_EMPTY	RW	UART1 interrupt enable for THR empty: 1 = Enable. 0 = Disable.	0
0	bIER_RECV_RDY	RW	UART1 interrupt enable for receiver data ready:	0

			1 = Enable. 0 = Disable.	

UART1 PIN mode is set by the combination of bIER_PIN_MOD1, bIER_PIN_MOD0, bXBUS_CS_OE, bXBUS_AL_OE and bALE_CLK_EN. The last three may combine RS485EN:

RS485EN = ~ (bXBUS_CS_OE & ~ bXBUS_AL_OE | bALE_CLK_EN)

RS485EN	bIER_PIN_MOD1	bIER_PIN_MOD0	Mode description
x	0	0	RXD1/TXD1 connect P2.6/P2.7
0	1	0	RXD1/TXD1 connect P4.0/P4.4
0	0	1	RXD1/TXD1/TNOW connect P2.6/P2.7/P2.5
0	1	1	RXD1/TXD1 connect iRS485 pins XA/XB
1	1	0	RXD1/TXD1 connect iRS485 pins XA/XB, TNOW connect P4.4
1	0	1	RXD1/TXD1 connect iRS485 pins XA/XB, TNOW connect P2.5
1	1	1	RXD1/TXD1 connect P2.6/P2.7

The last 3 configurations in the above table are iRS485 half-duplex communication modes. In this case, RS485EN=1, RXD1/TXD1 connect iRS485 pins XA/XB, and directly support simple long-distance multi-device communication like RS485 bus through built-in half-duplex differential transceiver. In iRS485 half-duplex mode, set bMCR_HALF in SER1_MCR to 1.

Interrupt identification register (SER1_IIR):

Bit	Name	Access	Description	Reset value
[7:6]	MASK_U1_IIR_ID	R0	FIFO enable flag. 11 means that FIFO is enabled.	00b
[5:4]	Reserved	RO	Reserved	00b
[3:0]	MASK_U1_IIR_INT	R0	UART1 interrupt status flag	0001b
0	bIIR_NO_INT	RO	1 = No UART1 interrupt. 0 = Interrupt.	1

UART1 interrupt status consists of 4 bits: bIIR_INT_FLAG3, bIIR_INT_FLAG2, bIIR_INT_FLAG1, and bIIR_INT_FLAG0, details as follows:

Name	Value	Type	Source	Clear interrupt
U1_INT_SLV_ADDR	0Eh	UART1 interrupt by slave address match	Receive a data of UART address which match pre-address or broadcast address	Read SER1_IIR or disable multi-device communication
U1_INT_LINE_STAT	06h	UART1 interrupt by receiver line status	bLSR_OVER_ERR, or bLSR_PAR_ERR, or bLSR_FRAME_ERR, or bLSR_BREAK_ERR	Read SER1_LSR
U1_INT_RECV_RDY	04h	UART1 interrupt by receiver data available	Receive number reach FIFO trigger level	Read SER1_RBR
U1_INT_RECV_TOUT	0Ch	UART1 interrupt by receiver FIFO timeout	Receive data already and not receive next data over 4-byte time	Read SER1_RBR

U1_INT_THR_EMPTY	02h	UART1 interrupt by THR empty	UART1 interrupt by THR empty, bIER_THR_EMPTY changing from 0 to 1 may re-enable this interrupt.	Read SER1_IIR or write SER1_THR
U1_INT_MODEM_CHG	00h	UART1 interrupt by modem status change	△CTS, △DSR, △RI, △DCD	Read SER1_MSR
U1_INT_NO_INTER	01h	No UART interrupt	No interrupt	

FIFO control register (SER1_FCR):

Bit	Name	Access	Description	Reset value
7	bFCR_FIFO_TRIG1	W0	UART1 receiver FIFO trigger level high bit	0
6	bFCR_FIFO_TRIG0	W0	UART1 receiver FIFO trigger level low bit	0
[5:3]	Reserved	RO	Reserved	000b
2	bFCR_T_FIFO_CLR	W0	1 = clear UART1 transmitter FIFO, high action, auto cleared.	0
1	bFCR_R_FIFO_CLR	W0	1 = clear UART1 receiver FIFO, high action, auto cleared	0
0	bFCR_FIFO_EN	W0	1 = UART1 FIFO enable. 0 = disable	0

MASK_U1_FIFO_TRIG consists of bFCR_FIFO_TRIG1 and bFCR_FIFO_TRIG0, which is used to set receive FIFO interrupt and hardware flow control trigger level:

00 = 1 byte.

01 = 2 bytes.

10 = 4 bytes.

11 = 7 bytes.

Line control register (SER1_LCR):

Bit	Name	Access	Description	Reset value
7	bLCR_DLAB	RW	UART1 divisor latch access bit enable. 0 = SER1_RBR,SER1_THR,SER1_IER,SER1_ADR. 1 = SER1_DLL,SER1_DLM,SER1_DIV.	0
6	bLCR_BREAK_EN	RW	UART1 break control enable: 0 = No BREAK output. 1 = For make BREAK output.	0
5	bLCR_PAR_MOD1	RW	UART1 parity mode high bit	0
4	bLCR_PAR_MOD0	RW	UART1 parity mode low bit	0
3	bLCR_PAR_EN	RW	UART1 parity bit enable: 0 = Disable. 1 = Enable.	0
2	bLCR_STOP_BIT	RW	UART1 stop bit length: 0 = 1 bit. 1 = 2 bits.	0
1	bLCR_WORD_SZ1	RW	UART1 word size high bit	0
0	bLCR_WORD_SZ0	RW	UART1 word size low bit	0

The combination of bLCR_PAR_MOD1 and bLCR_PAR_MOD0 is used to set parity mode when bLCR_PAR_EN is 1:

00 = odd parity.

01 = even parity.

10 = mark bit parity.
11 = space parity.

The combination of bLCR_WORD_SZ1 and bLCR_WORD_SZ0 is used to set data length:
00 = 5 bits.
01 = 6 bits.
10 = 7 bits.
11 = 8 bits.

UART1 modem control register (SER1_MCR):

Bit	Name	Access	Description	Reset value
7	bMCR_HALF	RW	1 = enable UART1 half-duplex mode 0 = disable	0
6	bMCR_TNOW	RW	UART1 RTS Pin mode selection: 0 = standard RTS output. 1 = enable TNOW output on RTS pin.	0
5	bMCR_AUTO_FLOW	RW	UART1 enable auto flow control by CTS & RTS pin: 1 = enable. 0 = disable. After hardware flow control is enabled, UART1 will continue to transmit the next data only when CTS input is active (low). Otherwise, UART1 transmission will be suspended. After hardware flow control is enabled, if bMCR_RTS is 1, UART1 RTS pin will be active (low) automatically when the receiver FIFO is empty, and it will be invalid automatically until the number of the received bytes reaches FIFO trigger point, and the RTS pin can be active again when the receiver FIFO is empty. CTS input status change will not generate MODEM status interrupt after hardware flow control is enabled. Connect the CTS pin of one side to the RTS pin of the other side, and connect the RTS pin of one side to the CTS pin of the other side, for hardware automatic rate control.	0
4	bMCR_LOOP	RW	UART1 enable local loop back for testing: 1 = enable. 0 = disable. In local loop back for testing, all external output pins of UART1 are invalid, TXD1 internally returns to RXD1, RTS internally returns to CTS, DTR internally returns to DSR, OUT1 internally returns to RI, and OUT2 internally returns to DCD.	0
3	bMCR_OUT2	RW	1 = enable interrupt request output, 0 = disable.	0
2	bMCR_OUT1	RW	UART1 control OUT1, not real pin, for local loop test or as a general-purpose data bit	0
1	bMCR_RTS	RW	UART1 RTS output control bit: 0 = invalid (high). 1 = valid (low).	0
0	bMCR_DTR	RW	UART1 DTR output control bit: 0 = invalid (high). 1 = valid (low).	0

UART1 line status register (SER1_LSR):

Bit	Name	Access	Description	Reset value
7	bLSR_ERR_R_FIFO	R0	Error in UART1 receiver FIFO: 1 = at least one bLSR_PAR_ERR, bLSR_FRAME_ERR or bLSR_BREAK_ERR error in UART1 receiver FIFO	0
6	bLSR_T_ALL_EMP	R0	UART1 transmitter all empty status: 1 = SER1_THR, FIFO and transmitter shift register are empty.	1
5	bLSR_T_FIFO_EMP	R0	UART1 transmitter FIFO empty status: 1 = SER1_THR and FIFO are empty.	1
4	bLSR_BREAK_ERR	R0	UART1 receiver break error: 1 = BREAK line interval status is detected.	0
3	bLSR_FRAME_ERR	R0	UART1 receiver frame error: 1 = frame error in receiver FIFO, lack of valid stop bit.	0
2	bLSR_PAR_ERR	R0	UART1 receiver parity error: 1 = parity error in receiver FIFO	0
1	bLSR_OVER_ERR	R0	UART1 receiver overflow error: 1 = overflow error in receiver FIFO.	0
0	bLSR_DATA_RDY	R0	UART1 receiver FIFO data ready: 1 = there is received data in receiver FIFO. After reading all data in FIFO, it will be automatically cleared.	0

UART1 modem status register (SER1_MSR):

Bit	Name	Access	Description	Reset value
7	bMSR_DCD	R0	UART1 DCD action status:1 = valid (low-level)	1
6	bMSR_RI	R0	UART1 RI action status:1 = valid (low-level)	1
5	bMSR_DSR	R0	UART1 DSR action status:1 = valid (low-level)	1
4	bMSR_CTS	R0	UART1 CTS action status: 1 = valid (low-level)	1
3	bMSR_DCD_CHG	R0	UART1 DCD changed status, high action	0
2	bMSR_RI_CHG	R0	UART1 RI changed status, high action	0
1	bMSR_DSR_CHG	R0	UART1 DSR changed status, high action	0
0	bMSR_CTS_CHG	R0	UART1 CTS changed status, high action	0

UART1 slave address preset register (SER1_ADDR), valid only when bLCR_DLAB=0:

Bit	Name	Access	Description	Reset value
[7:0]	SER1_ADDR	RW	UART1 bus address preset register, for automatic comparison in multi-device mode	FFh

SER_ADDR preset local address for multi-device communication in slave mode, interrupt when address match or receive broadcast address and allow receiving the following data. Not allow to receive any data before it receives matching address, and stop receiving when start to transmit or rewrite SER1_ADDR until address match or receive broadcast address.

Bus address auto-compare function is disabled when SER1_ADDR = 0FFH, or bLCR_PAR_EN = 0.

Bus address auto-compare function is enabled when SER1_ADDR != 0FFH and bLCR_PAR_EN = 1, and configure as follow: set bLCR_WORD_SZ1, bLCR_WORD_SZ0 and bLCR_PAR_MOD1 to 1, set bLCR_PAR_MOD0 to 1 when address bit is 0, and clear bLCR_PAR_MOD0 when address bit is 1.

UART1 baud rate divisor latch LSB (SER1_DLM, SER1_DLL), only valid when bLCR_DLAB=1:

Bit	Name	Access	Description	Reset value
[7:0]	SER1_DLL	RW	Baud rate divisor consists of SER1_DLL (low byte) and DLM (high byte), can be read and written when bLCR_DLAB = 1. Baud rate divisor = Fsys * 2 / SER1_DIV / 16 / baud rate	xxh
[7:0]	SER1_DLM	RW		80h

UART1 prescaler divisor register (SER1_DIV), only valid when bLCR_DLAB=1:

Bit	Name	Access	Description	Reset value
[7:0]	SER1_DIV	RW	Generate internal base clock for baud rate generator after Fsys multiplier and divisor. Can be read and written only when bLCR_DLAB = 1	xxh

13.3 UART Application

UART0 application:

(1) Select the baud rate generator for UART0, either from timer T1 or T2, and configure corresponding counter.

(2) Turn on the timer.

(3) Set SM0, SM1, SM2 of SCON to select the working mode of serial port 0. Set REN as 1 and enable UART0 receiving.

(4) Serial port interrupt can be set or R1 and T1 interrupt state can be inquired.

(5) Read and write SBUF to realize data receiving and transmitting of serial port, and the allowable baud rate error of the serial port receiving signal is not more than 2%.

UART1 application:

(1) Set this bit bLCR_DLAB of SER1_LCR to 1, write the UART1 to prescaler register SER1_DIV, calculate the baud rate divisor according to the baud rate, divisor = Fsys/8/SER1_DIV/baud rate, write the higher and lower bytes of the divisor to SER1_DLM and SER1_DLL respectively.

(2) Set SER1_LCR, select the appropriate serial port data format, data byte and parity check mode, etc.

(3) SER1_IER can be optionally set, and UART1 interrupt status trigger can be selected.

(4) If interrupt mode is used, you need to set this bit bMCR_OUT2 of SER1_MCR to 1 to enable the interrupt output; otherwise, you need to actively query the interrupt status bit.

(5) Read and write SER1_FIFO to realize data receiving and transmitting of serial port, and the allowable baud rate error of the serial port receiving signal is not more than 2%.

14. Synchronous Serial Interface SPI

14.1 SPI Introduction

CH558 chip provides an SPI interface for high-speed synchronous data transmission with peripherals. Features:

(1) Support master mode and slave mode;

(2) Support mode 0 and mode 3 clock mode;

(3) Optional 3-line full-duplex or 2-line half-duplex mode;

(4) Optional MSB high bit in front is sent first or LSB low bit in front is sent first;

(5) Clock frequency is adjustable, up to half of the dominant frequency of the system;

(6) Built-in 3-byte receiver FIFO and 1-byte transmitter FIFO;

(7) Support multiple interrupts.

14.2 SPI Register

Table 14.2.1 List of SPI Related Register

Name	Add:	Description	Reset value
SPI0_SETUP	FCh	SPI0 register	00h
SPI0_S_PRE	FBh	SPI0 slave mode preset data register	20h
SPI0_CK_SE	FBh	SPI0 clock frequency division setting register	20h
SPI0_CTRL	FAh	SPI0 control register	02h
SPI0_DATA	F9h	SPI0 data transmitting and receiving register	xxh
SPI0_STAT	F8h	SPI0 state register	08h

SPI0 setting register (SPI0_SETUP):

Bit	Name	Access	Description	Reset value
7	bS0_MODE_SLV	RW	SPI0 master slave mode selection bit, if the bit is 0, SPI0 is master mode; if the bit is 1, SPI0 is the slave mode/device mode	0
6	bS0_IE_FIFO_OV	RW	FIFO overflow interrupt enable bit in slave mode, if the bit is 1, it enables FIFO overflow interrupt; if the bit is 0, FIFO overflows will not generate interrupt	0
5	bS0_IE_FIRST	RW	Receiving first byte completes interrupt enable bit in slave mode, if the bit is 1, the interrupt is trigger when the first data byte is received in slave mode; if the bit is 0, the interrupt will not be generated when the first byte is received	0
4	bS0_IE_BYTE	RW	Data byte transmission completes interrupt enable bit, if the bit is 1, it allows the byte transmission to complete interrupt; if the bit is 0, the interrupt will not be generated when the byte transmission is completed	0
3	bS0_BIT_ORDER	RW	Order control bit of data byte, if the bit is 0, MSB high bit in front is in front; if the bit is 1, LSB low bit in front is in front	0
2	Power to Set Aside	RO	Power to Set Aside	0
1	bS0_SLV_SELT	R0	Chip selection activation status bit in slave mode, if the bit is 0, it indicates not selected currently; if the bit is 1, it indicates being selected currently	0
0	bS0_SLV_PRELOAD	R0	Pre-load data status bit in slave mode, if the bit is 1, it indicates the current pre-load state after the chip selection is valid and before the data has been transmitted	0

SPI0 clock frequency division setting register (SPI0_CK_SE):

Bit	Name	Access	Description	Reset value
[7:0]	SPI0_CK_SE	RW	Set SPI0 clock frequency division coefficient in master mode	20h

SPI0 preset data register in slave mode (SPI0_S_PRE)

Bit	Name	Access	Description	Reset value
[7:0]	SPI0_S_PRE	RW	Preload first transmission data in slave mode	20h

SPI0 control register (SPI0_CTRL):

Bit	Name	Access	Description	Reset value
7	bS0_MISO_OE	RW	MISO output enable control bit of SPI0, if the bit is 1, it allows output; if the bit is 0, it disable output	0
6	bS0_MOSI_OE	RW	MOSI output enable control bit of SPI0, if the bit is 1, it allows output; if the bit is 0, it disable output	0
5	bS0_SCK_OE	RW	SCK output enable control bit of SPI0, if the bit is 1, it allows output; if the bit is 0, it disable output	0
4	bS0_DATA_DIR	RW	SPI0 data direction control bit, if the bis 0, the data will be output. Only write FIFO will be regarded as effective operation, and start an SPI transmission; if the bit is 1, the data will be input, write or read FIFO will be regarded as a effective operation, and start an SPI transmission	0
3	bS0_MST_CLK	RW	SPI0 host clock mode control bit, if the bit is 0, the mode will be 0, and the SCK defaults to low level when in idle; if the bit is 1, the mode will be 3, and the SCK defaults to high level	0
2	bS0_2_WIRE	RW	2-line half-duplex mode enable bit of SPI0, if the bit is 0, it will be 3-line full duplex mode, including SCK, MOSI and MISO; if the bit is 1, it will be 2-line half-duplex mode, including SCK, MISO	0
1	bS0_CLR_ALL	RW	If the bit is 1, empty SPI0 interrupt flag and FIFO, and the software is required to be reset	1
0	bS0_AUTO_IF	RW	Enable bit that allows automatic reset of byte receiving completion interrupt flag through FIFO effective operation, if the bit is 1, it will automatically reset the byte receiving completion interrupt flag S0_IF_BYTE during the effective read and write operation of FIFO	0

SPI0 data transceiver register (SPI0_DATA):

Bit	Name	Access	Description	Reset value
[7:0]	SPI0_DATA	RW	Including transmitting and receiving two physically separated FIFOs, read operation corresponds to receiving data FIFO; write operation corresponds to transmitting data FIFO, and the effective read and write operation can initiate an SPI transmission	xxh

SPI0 state register (SPI0_STAT):

Bit	Name	Access	Description	Reset value
7	S0_FST_ACT	R0	If the bit is 1, it indicates that the current state is the completion of the first byte receiving in slave mode	0
6	S0_IF_OV	RW	FIFO overflow flag bit in slave mode, if the bit is 1, it indicates FIFO overflow interrupt; if the bit is 0, it	0

			indicates that there is no interrupt. Direct bit access to reset or write 1 to reset. When bS0_DATA_DIR=0, transmitting FIFO empty trigger interrupt; when bS0_DATA_DIR=1, receiver FIFO full trigger interrupt		
5	S0_IF_FIRST	RW	Receiving first byte completion interrupt flag bit in slave mode, if the bit is 1, it indicates that the first byte is received. Direct bit access to reset or write 1 to reset		0
4	S0_IF_BYTE	RW	Data byte transmission completion interrupt flag bit, if the bit is 1, it indicates that one byte transmission is completed Direct bit access to reset or write 1 to reset, or reset by FIFO effective operation when bS0_AUTO_IF=1		0
3	S0_FREE	R0	SPI0 idle flag bit, if the bit is 1, it indicates that there is no SPI shift at present, usually it is in the idle period between the data bytes		1
2	S0_T_FIFO	R0	SPI0 transmitts FIFO counts, effective value is 0 or 1		0
1	S0_R_FIFO1	R0	SPI0 receiver FIFO count bit 1	Valid value is 0 or 1 or 2 or 3	0
0	S0_R_FIFO0	R0	SPI0 receiver FIFO count bit 0		0

14.3 SPI Transmission Format

SPI host mode supports two transmission formats, i.e. mode 0 and mode 3. You can select it by setting this bit bS0_MST_CLK in SPI control register SPI0_CTRL. CH558 always samples MISO data on the rising edge of CLK. The data transmission format is shown in the figure below.

Mode 0: bS0_MST_CLK = 0

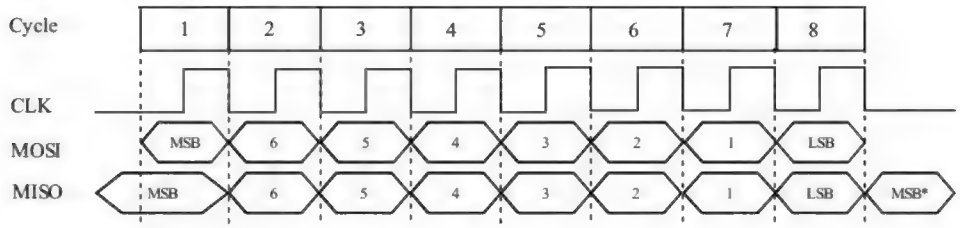

Figure 14.3.1 SPI Mode 0 Sequence Diagram

Mode 3: bS0_MST_CLK = 1

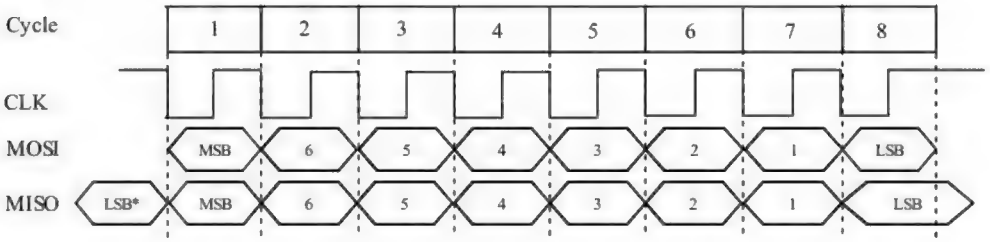

Figure 14.3.2 SPI Mode 3 Sequence Diagram

14.4 SPI Configuration

14.4.1 SPI Master Mode Configuration

In SPI master mode, SCK pin output serial clock, and chip selection output pins can be specified as any I/O pins.

Configuration Steps:

(1) Set SPI clock frequency division setting register SPI0_CK_SE, and configure SPI clock frequency.

(2) Set the bit bS0_MODE_SLV of SPI setting register SPI0_SETUP to 0, and configure as the master mode.

(3) Set the bit bS0_MST_CLK of SPI control register SPI0_CTRL, and set as mode 0 or 3 as required.
(4) Set the bit bS0_SCK_OE and bS0_MOSI_OE of SPI control register SPI0_CTRL to 1, and the bit bS0_MISO_OE to 0, set the P1 port direction bSCK and bMOSI as output, bMISO as input, and chip selection pin as output.

Data transmitting process:
(1) Write SPI0_DATA register, write the data to be sent to FIFO to automatically initiate an SPI transmission.
(2) Wait for S0_FREE to be 1, it indicates that the transmitting is completed and the transmitting of the next byte can be proceeded.

Data receiving process:
(1) Write SPI0_DATA register, write any data to FIFO, e.g. 0FFh to initiate an SPI transmission.
(2) Wait for S0_FREE to be 1, it indicates that the receiving is completed and can read SPI0_DATA to obtain the received data.
(3) If bS0_DATA_DIR is set to 1 previously, the above read operation will also initiate the next SPI transmission, otherwise it will not start.

14.4.2 SPI Slave Mode Configuration

In the slave mode, SCK pin is used to receive the serial clock of the connected SPI host.
(1) Set the bit bS0_MODE_SLV of SPI0 setting register SPI0_SETUP to 1, and configure as the slave mode.
(2) Set the bit bS0_SCK_OE and bS0_MOSI_OE of SPI0 control register SPI0_CTRL to 0, and the bit bS0_MISO_OE to 1, set the P1 port direction bSCK, bMOSI and bMISO as well as chip selection pin as input. When SCS chip selection is valid (low level), MISO will automatically enable output. At the same time, it is recommended to set MISO pin as high impedance input mode (BP1_OC=0, P1_Dir[6]=0, P1_PU[6]=0), so that MISO will not output during invalid chip selection, which is convenient for sharing SPI bus.
(3) Optionally, set the preset data register SPI0_S_PRE in SPI slave mode, to be automatically loaded into the buffer for the first time after chip selection for external output. After 8 serial clocks, that is, the first byte of data transmission and exchange is completed, CH558 obtains the first byte of data (possibly command code) sent by the external SPI host, and the external SPI host obtains the preset data (possibly the status value) in SPI0_S_PRE through exchange. this bit 7 of register SPI0_S_PRE will be automatically loaded into the MISO pins during the low level period of SCK after the SPI chip selection is effective. For SPI mode 0, if this bit 7 of SPI0_S_PRE is preset by CH558, the external SPI host will obtain the preset value of bit 7 of SPI0_S_PRE by inquiring the MISO pins when the SPI chip selection is effective but has no data transmission, thereby the value of bit 7 of SPI0_S_PRE can be obtained only by the effective SPI chip selection.

Data transmitting process:
Inquire S0_IF_BYTE or wait for interrupt, and after each SPI data byte transmission, write the SPI0_DATA register and write the data to be sent to FIFO. Or wait for S0_FREE to be changed from 0 to 1, and the transmitting of the next byte can be proceeded.

Data receiving process:
Inquire S0_IF_BYTE or wait for interrupt, and after each SPI data byte transmission, read the SPI0_DATA register and obtain the received data from FIFO. Query MASK_S0_RFIFO_CNT (ie S0_R_FIFO1 and S0_R_FIFO0) to get the number of remaining bytes in the FIFO.

15. Analog-to-digital Converter (ADC)

15.1 ADC Introduction

CH558 chip has a 10-bit or 11-bit optional successive approximation analog-to-digital converter. The converter has 8 analog signal input channels, which allows time-sharing acquisition. Main ADC features:

(1) Optional 10-bit or 11-bit resolution;

(2) ADC analog input voltage range: from 0 to VDD33;

(3) Highest sampling rate of 1MSPS;

(4) Support automatic alternate channel mode for automatic alternate conversion between two input channels;

(5) Built-in 2-level FIFO, supporting automatic sampling and DMA.

15.2 ADC Register

Table 15.2.1 List of ADC Related Register

Name	Address	Description	Reset value
ADC_EX_SW	F7h	ADC extended analog switch control register	00h
ADC_SETUP	F6h	ADC setting register	08h
ADC_FIFO_H	F5h	ADC FIFO higher byte (read-only)	0xh
ADC_FIFO_L	F4h	ADC FIFO lower byte (read-only)	xxh
ADC_FIFO	F4h	ADC_FIFO_L and ADC_FIFO_H form 16-bit SFR	0xxxh
ADC_CHANN	F3h	ADC channel selection register	00h
ADC_CTRL	F2h	ADC control register	00h
ADC_STAT	F1h	ADC status register	04h
ADC_CK_SE	EFh	ADC clock frequency division setting register	10h
ADC_DMA_CN	EEh	DMA remaining counter register	00h
ADC_DMA_AH	EDh	DMA current buffer address higher byte	0xh
ADC_DMA_AL	ECh	DMA current buffer address low byte	xxh
ADC_DMA	ECh	ADC_DMA_AL and ADC_DMA_AH form 16-bit SFR	0xxxh

DMA current buffer address (ADC_DMA):

Bit	Name	Access	Description	Reset value
[7:0]	ADC_DMA_AH	RW	The initial value of higher bytes of the current DMA address can be preset, and it will increase automatically after DMA; only the lower 4 bits are valid, and the higher 4 bits are fixed to be 0	0xh
[7:0]	ADC_DMA_AL	RW	The initial value of lower bytes of the current DMA address can be preset, and it will increase automatically after DMA; only the higher 7 bits are valid, and the lowest bit is fixed to be 0; only even addresses are supported	xxh

DMA remaining counter register (ADC_DMA_CN):

Bit	Name	Access	Description	Reset value
[7:0]	ADC_DMA_CN	RW	The initial value of current DMA remaining count can be preset, and it will automatically decrease after DMA operation	00h

Clock frequency division setting register (ADC_CK_SE):

Bit	Name	Access	Description	Reset value
7	bADC_CHK_CLK_SEL	RW	AIN7 level detection delay clock frequency selection. If this bit is 0, low-speed 1x clock frequency; if this bit is 1, high-speed 4x clock frequency	0
[6:0]	MASK_ADC_CK_SE	RW	ADC clock division factor, set the internal ADC working clock	10h

ADC status register (ADC_STAT):

Bit	Name	Access	Description	Reset value
7	bADC_IF_DMA_END	RW	DMA completion interrupt flag bit. If this bit is 1, there is an interrupt; if this bit is 0, there is no interrupt. Clear by writing 1 or clear when writing ADC_DMA_CN	0
6	bADC_IF_FIFO_OV	RW	If this bit is 1, there is FIFO overflow interrupt; if this bit is 0, there is no interrupt. Write 1 to reset	0
5	bADC_IF_AIN7_LOW	RW	If this bit is 1, it means that AIN7 low level interrupt is detected, clear by writing 1	0
4	bADC_IF_ACT	RW	If this bit is 1, it indicates that an ADC conversion is interrupted, clear by writing 1	0
3	bADC_AIN7_INT	R0	If this bit is 1, it means the delay state of AIN7 input low level	0
2	bADC_CHANN_ID	R0	In the automatic alternate channel mode, it is the current channel identification mark. 0 means AIN0 or AIN6; 1 means AIN1 or AIN4 or AIN7	0
2	bADC_DATA_OK	RO	In manual channel selection mode, it is the ADC conversion completion and result ready flag. If it is 1, ADC data is ready and the ADC converter is idle; if it is 0, ADC is in progress and the data is not yet ready	1
[1:0]	MASK_ADC_FIFO_CNT	R0	ADC FIFO current count	00b

MASK_ADC_FIFO_CNT is composed of bADC_FIFO_CNT1 and bADC_FIFO_CNT0, used to display the FIFO count of ADC.

MASK_ADC_FIFO_CNT	Description
00b	FIFO is empty. When reading FIFO, directly return the current ADC result value
01b	There is 1 data in FIFO
10b	FIFO is full, and there are 2 data in FIFO
11b	Unknown mistake

ADC control register (ADC_CTRL):

Bit	Name	Access	Description	Reset value
7	bADC_SAMPLE	RW	In manual sampling mode, it is the sampling control bit. Set it to 1 and then clear it to generate a high-level pulse to start the ADC once; In the automatic sampling mode, it is the sampling pulse status of automatic sampling	0
6	bADC_SAMP_WIDTH	RW	Width control bit of sampling pulse in automatic sampling mode. If it is 0, it is 1 ADC clock width;	0

			if it is 1, it is 2 ADC clock widths	
5	bADC_CHANN_MOD1	RW	ADC channel mode higher bit	0
4	bADC_CHANN_MOD0	RW	ADC channel mode lower bit	0
[3:0]	MASK_ADC_CYCLE	RW	Number of ADC operation cycles. 0 means manual sampling; non-0 value means to set the operation cycle of automatic sampling (counted by ADC clock)	0000b

MASK_ADC_CHANN composed of bADC_CHANN_MOD1 and bADC_CHANN_MOD0 is the ADC channel control mode flag bit.

MASK_ADC_CHANN	Description
00b	Manually select the channel mode, and set ADC_CHANN to select the current input channel
01b	In automatic alternate channel mode, automatically alternatively switch between AIN0 and AIN1
10b	In automatic alternate channel mode, automatically alternatively switch between AIN6 and AIN4
11b	In automatic alternate channel mode, automatically alternatively switch between AIN6 and AIN7

ADC channel selection register (ADC_CHANN):

Bit	Name	Access	Description	Reset value
[7:0]	ADC_CHANN	RW	Select the current ADC analog input channel, select 1 from 8 channels, and bit 0 ~ bit 7 correspond to AIN0 ~ AIN7 respectively	00h

ADC FIFO port (ADC_FIFO):

Bit	Name	Access	Description	Reset value
[7:0]	ADC_FIFO_H	RO	ADC FIFO higher byte, only the lower 4 bits are valid, and the higher 4 bits are fixed to be 0	0xh
[7:0]	ADC_FIFO_L	RO	ADC FIFO lower byte	xxh

ADC setting register (ADC_SETUP):

Bit	Name	Access	Description	Reset value
7	bADC_DMA_EN	RW	If this bit is 1, enable ADC DMA and DMA interrupt; if this bit is 0, disable it	0
6	bADC_IE_FIFO_OV	RW	If the bit is 1, enable FIFO overflow interrupt; if the bit is 0, close enable	0
5	bADC_IE_AIN7_LOW	RW	If this bit is 1, enable to detect the AIN7 low level interrupt	0
4	bADC_IE_ACT	RW	If this bit is 1, enable the ADC conversion completion interrupt; if this bit is 0, disable it	0
3	bADC_CLOCK	RO	Current level of internal ADC clock signal	0
2	bADC_POWER_EN	RW	The power control bit of ADC sampling conversion module, if this bit is 0, it indicates that turn off the power supply of the ADC module and input the sleep state; if this bit is 1, it indicates ON	0

1	bADC_EXT_SW_EN	RW	Power control bit of extended analog switch module. If this bit is 0, turn off extended analog switch module; if this bit is 1, turn on the module	0
0	bADC_AIN7_CHK_EN	RW	Detect the power control bit of AIN7 low-level module. If this bit is 0, the detection of AIN7 low-level module is turned off; if this bit is 1, it is turned on	0

ADC extended analog switch control register (ADC_EX_SW):

Bit	Name	Access	Description	Reset value
7	bADC_SW_AIN7_H	RW	AIN7 channel internal analog switch connection control. If this bit is 1, internally connect AIN7 to VDD33; if this bit is 0, disconnect AIN7 and VDD33	0
6	bADC_SW_AIN6_L	RW	AIN6 channel internal analog switch connection control. If this bit is 1, internally connect AIN6 to GND; if this bit is 0, disconnect AIN6 and GND	0
5	bADC_SW_AIN5_H	RW	AIN5 channel internal analog switch connection control. If this bit is 1, internally connect AIN5 to VDD33; if this bit is 0, disconnect AIN5 and VDD33	0
4	bADC_SW_AIN4_L	RW	AIN4 channel internal analog switch connection control. If this bit is 1, internally connect AIN4 to GND; if this bit is 0, disconnect AIN4 and GND	0
3	bADC_EXT_SW_SEL	RW	The on-resistance value selection bit of internal analog switch. If this bit is 0, select high resistance, about 800Ω; if this bit is 1, select low resistance, about 300Ω	0
2	bADC_RESOLUTION	RW	ADC resolution selection bit. If this bit is 0, select 10-bit resolution; if this bit is 1, select 11-bit resolution	0
1	bADC_AIN7_DLY1	RW	Delay control bit 1 for detecting AIN7 low level	0
0	bADC_AIN7_DLY0	RW	Delay control bit 0 for detecting AIN7 low level	0

bADC_AIN7_DLY1 and bADC_AIN7_DLY0 form MASK_ADC_AIN7_DLY, which is used to select the delay after detecting AIN7 level changes: 00 means no delay, 01 means the longest delay, 10 means the longer delay, and 11 means the shorter delay.

15.3 ADC Function

ADC sampling mode configuration steps:

(1) Set the bADC_POWER_EN bit in the ADC setting register ADC_SETUP to 1, and turn on the ADC module.

(2) Set the clock frequency division setting register ADC_CK_SE, select the clock frequency, the maximum frequency is 12MHz, and it is recommended not to be lower than 1MHz.

(3) Clear the existing data in the FIFO; if you need to use interrupt or DMA, make relevant settings here.

(4) For automatic sampling mode, first set ADC channel selection register ADC_CHANN.

(5) Set bADC_SAMPLE and MASK_ADC_CYCLE in the ADC control register ADC_CTRL. If MASK_ADC_CYCLE is set to 0, it is in manual sampling mode; if MASK_ADC_CYCLE is set to a non-0 value, it is in automatic sampling mode. At this time, MASK_ADC_CYCLE is continuous automatic sampling clock cycle.

(6) For manual sampling mode, set the ADC channel selection register ADC_CHANN to select the ADC analog signal input channel.

(7) If it is in manual sampling mode, you need to set the bADC_SAMPLE bit to 1 and delay for at least one ADC

clock cycle before clearing, to complete an analog signal sampling and start an ADC conversion.

(8) Wait for the bADC_IF_ACT bit of ADC status register ADC_STAT to be 1, indicating that the ADC conversion is completed, and the result data can be read through ADC_FIFO.

(9) Or read the MASK_ADC_FIFO_CNT of the ADC status register ADC_STAT to obtain the FIFO count, and then read some data through ADC_FIFO. It is recommended to discard the first ADC result data because the sampling may be incomplete.

(10) If DMA step is needed: set ADC_DMA as the start address value of user-defined data buffer, set ADC_DMA_CN as user-defined DMA remaining count, and set the bADC_DMA_EN bit in ADC_SETUP to 1, that is, enable the DMA function.

(11) There are 12 bits of ADC result data, among which bits 0 to 10 are ADC values, bit 11 is a flag bit, and bits 12 to 15 are always 0. For manual channel selection mode, bit 11 is always 0; for automatic alternate channel mode, bit 11 represents the channel identification flag of ADC value, refer to bADC_CHANN_ID description.

16. USB Controller

16.1 USB Controller Introduction

CH558 is built-in with USB controller and USB transceiver, with the features as follows:

(1) Support USB Device function, support USB 2.0 full speed 12Mbps or low speed 1.5Mbps;

(2) Support USB control transmission, batch transmission, interrupt transmission, synchronous/real-time transmission;

(3) Support data packet of up to 64 bytes, built-in FIFO, interrupts and DMA.

The USB related registers of CH558 are divided into 2 parts: USB global register and USB endpoint register.

16.2 Global Register

Table 16.2.1 List of USB Global Registers

Name	Add:	Description	Reset value
USB_INT_FG	D8h	USB interrupt flag register	0010 0000b
USB_INT_ST	D9h	USB interrupt status register (read only)	00xx xxxxb
USB_MIS_ST	DAh	USB miscellaneous status register (read only)	xx10 1000b
USB_INT_EN	E1h	USB interrupt enable register	0000 0000b
USB_CTRL	E2h	USB control register	0000 0110b
USB_DEV_AD	E3h	USB device address register	0000 0000b
USB_DMA_AH	E7h	DMA current buffer address higher byte (read-only)	0000 xxxxb
USB_DMA_AL	E6h	DMA current buffer address lower byte (read-only)	xxxx xxx0b
USB_DMA	E6h	USB_DMA_AL and USB_DMA_AH form 16-bit SFR	0xxxh

USB interrupt flag register (USB_INT_FG):

Bit	Name	Access	Description	Reset value
7	U_IS_NAK	RO	If the bit is 1, it indicates that NAK busy response is received during current USB transmission; if the bit is 0, it indicates that non-NAK response is received	0
6	U_TOG_OK	RO	Current USB transmission DatA0/1 synchronization flag matching state, if the bit is 1, it indicates synchronization and the data is valid; if the bit is 0, it indicates desynchrony and the data may be invalid	0
5	U_SIE_FREE	RO	Idle status bit of USB protocol processor, if the bit is 0, it indicates	1

			busy and USB transmission is in progress; if the bit is 1, it indicates USB in idle	
4	UIF_FIFO_OV	RW	USB FIFO overflow interrupt flag bit, if the bit is 1, it indicates FIFO overflow interrupt; if the bit is 0, it indicates that there is no interrupt. Direct bit access to reset or write 1 to reset	0
3	Reserved	RO	Reserved	0
2	UIF_SUSPEND	RW	USB bus suspending or waking event interrupt flag bit, if the bit is 1, it indicates that there is an interrupt, and the interrupt is triggered by USB suspending event or waking event; if the bit is 0, it indicates that there is no interrupt. Direct bit access to reset or write 1 to reset	0
1	UIF_TRANSFER	RW	USB transmission completion interrupt flag bit, if the bit is 1, it indicates that there is an interrupt, and the interrupt is triggered by a USB transmission completion; if the bit is 0, it indicates that there is no interrupt. Direct bit access to reset or write 1 to reset	0
0	UIF_BUS_RST	RW	USB bus reset event interrupt flag bit, if this bit is 1, it indicates that there is an interrupt, and the interrupt is triggered by the USB bus reset event; if this bit is 0, it indicates that there is no interrupt. Direct bit access to reset or write 1 to reset	0

USB interrupt state register (USB_INT_ST):

Bit	Name	Access	Description	Reset value
7	bUIS_IS_NAK	RO	If the bit is 1, it indicates that NAK busy response is received during current USB transmission. The same as U_IS_NAK	0
6	bUIS_TOG_OK	RO	Current USB transmission DatA0/1 synchronization flag matching state, if the bit is 1, it indicates synchronization; if the bit is 0, it indicates desynchrony. The same as U_TOG_OK	0
5	bUIS_TOKEN1	RO	The token PID of the current USB transmission service identifies the high bit in front	x
4	bUIS_TOKEN0	R0	The token PID of the current USB transmission service identifies the low bit in front	x
[3:0]	MASK_UIS_ENDP	RO	The endpoint number of the current USB transmission service, 0000 represents endpoint 0; ...; 1111 represents endpoint 15	xxxxb

BUIS_TOKEN1 and bUIS_TOKEN0 constitutes MASK_UIS_TOKEN, which is used to identify the token PID of the current USB transmission service: 00 represents OUT package;01 represents SOF package;10 represents IN package;11 represents SETUP package.

USB miscellaneous state register (USB_MIS_ST):

Bit	Name	Access	Description	Reset value
[7:6]	Reserved	RO	Reserved	xxb
5	bUMS_SIE_FREE	RO	Idle status bit of USB protocol processor, if the bit is 0, it indicates busy and USB transmission is in progress; if the bit is 1, it indicates USB in idle. The same as U_SIE_FREE	1
4	bUMS_R_FIFO_RDY	RO	USB receives FIFO data ready status bit, if the bit is 0, it indicates that receiving FIFO is null; if the bit is 1, it indicates that receiving FIFO is not null	0
3	bUMS_BUS_RESET	RO	USB bus reset status bit, if the bit is 0, it indicates that there is no USB bus reset at present; if the bit is 1, it indicates that USB bus reset is in progress	1
2	bUMS_SUSPEND	RO	USB suspending status bit, if the bit is 0, it indicates that	0

			there is USB activity at present; if the bit is 1, it indicates that there has been no USB activity for some time and suspending is requested	
[1:0]	Reserved	RO	Reserved	00b

USB interrupt enable register (USB_INT_EN):

Bit	Name	Access	Description	Reset value
7	bUIE_DEV_SOF	RW	If the bit is 1, enable receiving SOF package interrupt; if the bit is 0, it indicates forbidden	0
6	bUIE_DEV_NAK	RW	If the bit is 1, enable receiving NAK interrupt; if the bit is 0, it indicates forbidden	0
5	Power to Set Aside	RO	Power to Set Aside	0
4	bUIE_FIFO_OV	RW	If the bit is 1, enable FIFO overflow interrupt; if the bit is 0, close enable	0
3	Power to Set Aside	RO	Power to Set Aside	0
2	bUIE_SUSPEND	RW	If the bit is 1, enable USB bus suspending or waking event interrupt; if the bit is 0, it indicates forbidden	0
1	bUIE_TRANSFER	RW	If the bit is 1, enable USB transmission completion interrupt; if the bit is 0, it indicates forbidden	0
0	bUIE_BUS_RST	RW	If the bit is 1, enable USB bus reset event interrupt; if the bit is 0, it indicates forbidden	0

USB control register (USB_CTRL):

Bit	Name	Access	Description	Reset value
7	Reserved	RO	Reserved	0
6	bUC_LOW_SPEED	RW	USB bus signal transmission rate selection bit, if the bit is 0, select full speed 12Mbps; if the bit is 1, select low speed 1.5Mbps	0
5	bUC_DEV_PU_EN	RW	USB device enable and internal pull-up resistor control bit. if the bit is 1, enable USB device transmission and enable internal pull-up resistor	0
5	bUC_SYS_CTRL1	RW	USB system control high bit in front	0
4	bUC_SYS_CTRL0	RW	USB system control low bit in front	0
3	bUC_INT_BUSY	RW	The enable bit is automatically paused before the USB transmission completion interrupt flag is reset, if the bit is 1, it will automatically pause and reply to the busy NAK before the interrupt flag UIF_TRANSFER is reset; if the bit is 0, it will not pause	0
2	bUC_RESET_SIE	RW	USB protocol processor software reset control bit, if the bit 1, forcefully reset the USB protocol processor, which requires the software to reset	1
1	bUC_CLR_ALL	RW	If the bit is 1, empty USB interrupt flag and FIFO, which requires the software to reset	1
0	bUC_DMA_EN	RW	If the bit is 1, enable USB DMA and DMA interrupt; if the bit is 0, close enable	0

bUC_SYS_CTRL1 and bUC_SYS_CTRL0 constitutes the USB system control combination:

bUC_SYS_CTRL1	bUC_SYS_CTRL0	USB system control description
0	0	Disable USB device function, turn off internal pull-up resistor
0	1	Enable USB device function, turn off internal pull-up, and external pull-up needs to be added
1	0	Enable the USB device function and switching on the internal pull-up resistor

1	1	Enable the USB device function and switching on the internal weak pull-up resistor

USB device address register (USB_DEV_AD):

Bit	Name	Access	Description	Reset value
7	bUDA_GP_BIT	RW	USB common flag bit; the users can define it by their own, and reset or set by software	0
[6:0]	MASK_USB_ADDR	RW	Address of the USB device	00h

DMA current buffer address register (USB_DMA):

Bit	Name	Access	Description	Reset value
[7:0]	USB_DMA_AH	RO	DMA current buffer address higher byte, only the lower 4 bits are valid, and the higher 4 bits are fixed to be 0	0xh
[7:0]	USB_DMA_AL	R0	DMA current buffer address lower byte	xxh

16.3 Endpoint Register

CH558 provides 5 sets of bidirectional endpoints, including 0, 1, 2, 3, and 4. The maximum data packet length of all endpoints is 64 bytes.

Endpoint 0 is the default endpoint and supports control transmission. Transmission and receiving share a 64-byte data buffer area.

Endpoint 1, endpoint 2, endpoint 3 each includes a transmitting endpoint IN and a receiving endpoint OUT. Transmitting and receiving has a separate 64 bytes or double 64 bytes data buffer respectively, supporting control transmission, batch transmission, interrupt transmission, and real-time/synchronous transmission.

Endpoint 4 each includes a transmitting endpoint IN and a receiving endpoint OUT. Transmitting and receiving has a separate 64 bytes data buffer respectively, supporting control transmission, batch transmission, interrupt transmission, and real-time/synchronous transmission.

Each group of endpoints has a control register UEPn_CTRL and a length transmitting register UEPn_T_LEN(n=0/1/2/3/4), which are used to set the synchronization trigger bit of endpoint, the response to OUT transactions and IN transactions and the length of data to be sent.

As the necessary USB bus pull-up resistor of USB device, it can be set whether to be enabled by the software at any time. When bUC_DEV_PU_EN in the USB control register USB_CTRL is set to 1, CH558 will internally connect the pull-up resistor with the DP pin or DM pin of the USB bus based on bUD_LOW_SPEED and enable the USB device function.

When a USB bus reset, USB bus suspending or waking event is detected, or when the USB successfully processes data transmitting or receiving, the USB protocol processor will set corresponding interrupt flag and generate an interrupt request. The application program can directly query or query and analyze the interrupt flag register USB_INT_FG in the USB interrupt service program, and perform corresponding processing according to UIF_BUS_RST and UIF_SUSPEND; in addition, if UIF_TRANSFER is valid, it is required to continue to analyze the USB interrupt state register USB_INT_ST, and perform the corresponding processing according to the current endpoint number MASK_UIS_ENDP and the current transaction token PID identifier MASK_UIS_TOKEN. If the synchronization trigger bit bUEP_R_TOG of OUT transaction of each endpoint is set in advance, you can judge whether the synchronization trigger bit of the data packet received matches the synchronization trigger bit of the endpoint through U_TOG_OK or bUIS_TOG_OK; if the data are synchronized, the data are valid; if the data are not synchronized, the data should be discarded. After the USB transmitting or receiving interrupt is processed each time, the synchronization trigger bit of corresponding endpoint should be

modified correctly to synchronize the data packet sent next time and detect whether the data packet received next time is synchronized; in addition, bUEP_AUTO_TOG can be set to automatically flip the corresponding synchronization trigger bit after transmitting or receiving successfully.

The data to be sent by each endpoint is in their own buffer, and the length of the data to be sent is independently set in UEPn_T_LEN; the data received by each endpoint is in their own buffer, but the length of the data received is in the USB receiving length register USB_RX_LEN, and it can be distinguished according to the current endpoint number when the USB is receiving an interrupt.

Table 16.3.1 List of USB Device Endpoint Related Registers

Name	Add:	Description	Reset value
USB_RX_LEN	D1h	USB receiving length register (read only)	0xxx xxxxb
UEP1_CTRL	D2h	Endpoint 1 control register	0000 0000b
UEP1_T_LEN	D3h	Endpoint 1 transmitting length register	0xxx xxxxb
UEP2_CTRL	D4h	Endpoint 2 control register	0000 0000b
UEP2_T_LEN	D5h	Endpoint 2 transmitting length register	0000 0000b
UEP3_CTRL	D6h	Endpoint 3 control register	0000 0000b
UEP3_T_LEN	D7h	Endpoint 3 transmitting length register	0xxx xxxxb
UEP0_CTRL	DCh	Endpoint 0 control register	0000 0000b
UEP0_T_LEN	DDh	Endpoint 0 transmitting length register	0xxx xxxxb
UEP4_CTRL	DEh	Endpoint 4 control register	0000 0000b
UEP4_T_LEN	DFh	Endpoint 4 transmitting length register	0xxx xxxxb
UDEV_CTRL	E4h	USB device physical port control register	0100 x000b
UEP4_1_MOD	2446h	Endpoint 1, 4 mode control register	0000 0000b
UEP2_3_MOD	2447h	Endpoint 2, 3 mode control register	0000 0000b
UEP0_DMA_H	2448h	Endpoint 0 and 4 buffer area start address high byte	0000 xxxxb
UEP0_DMA_L	2449h	Endpoint 0 and 4 buffer area start address low byte	xxxx xxx0b
UEP0_DMA	2448h	UEP0_DMA_L and UEP0_DMA_H constitutes 16-bit SFR	0xxxh
UEP1_DMA_H	244Ah	Endpoint 1 buffer area start address high byte	0000 xxxxb
UEP1_DMA_L	244Bh	Endpoint 1 buffer area start address low byte	xxxx xxx0b
UEP1_DMA	244Ah	UEP1_DMA_L and UEP1_DMA_H constitutes 16-bit SFR	0xxxh
UEP2_DMA_H	244Ch	Endpoint 2 buffer area start address high byte	0000 xxxxb
UEP2_DMA_L	244Dh	Endpoint 2 buffer area start address low byte	xxxx xxx0b
UEP2_DMA	244Ch	UEP2_DMA_L and UEP2_DMA_H constitutes 16-bit SFR	0xxxh
UEP3_DMA_H	244Eh	Endpoint 3 buffer area start address high byte	0000 xxxxb
UEP3_DMA_L	244Fh	Endpoint 3 buffer area start address low byte	xxxx xxx0b
UEP3_DMA	244Eh	UEP3_DMA_L and UEP3_DMA_H constitutes 16-bit SFR	0xxxh
pUEP*	254*h	After bXIR_XSFR is set to 1, the name is used to address the above xSFR with pdata type, which is faster than xdata type addressing	

USB receiving length register (USB_RX_LEN):

Bit	Name	Access	Description	Reset value
[7:0]	bUSB_RX_LEN	RO	The number of bytes of the data received by the current USB endpoint	xxh

Endpoint n control register (UEPn_CTRL):

Bit	Name	Access	Description	Reset

				value
7	bUEP_R_TOG	RW	The synchronization trigger bit expected by the receiver of USB endpoint n (handle SETUP/OUT services). The bit 0 represents the expected DATA0; the bit 1 represents the expected DATA1	0
6	bUEP_T_TOG	RW	The synchronization trigger bit prepared by the transmitter of USB endpoint n (handle IN services). The bit 0 represents transmitting DATA0; the bit 1 represents transmitting DATA1	0
5	Reserved	RO	Reserved	0
4	bUEP_AUTO_TOG	RW	The synchronization trigger bit automatic turnover enable control bit, the bit 1 represents automatic turnover of the corresponding synchronization trigger bit after successful transmitting or receiving; the bit 0 represents no automatic turnover, but manual switch is allowed. Only support endpoint 1/2/3	0
3	bUEP_R_RES1	RW	Response control high bit in front by the receiver of endpoint n to SETUP/OUT services	0
2	bUEP_R_RES0	RW	Response control low bit in front by the receiver of endpoint n to SETUP/OUT services	0
1	bUEP_T_RES1	RW	Response control high bit in front by the transmitter of endpoint n to IN services	0
0	bUEP_T_RES0	RW	Response control low bit by the transmitter of endpoint n to IN services	0

MASK_UEP_R_RES, consisting of bUEP_R_RES1 and bUEP_R_RES0, is used to control the response of the receiver of endpoint n to the SETUP/OUT services: 00 represents reply ACK or ready; 01 represents timeout/no response, which is used to realize real-time/synchronous transmission of non-endpoint 0; 10 represents reply NAK or busy; 11 represents reply STALL or error.

MASK_UEP_T_RES, consisting of bUEP_T_RES1 and bUEP_T_RES0, is used to control the response of the transmitter of endpoint n to the IN services: 00 represents reply DATA0/DATA1 or data ready or expected ACK; 01 represents reply DATA0/DATA1 and expected no response, which is used to realize real-time/synchronous transmission of non-endpoint 0; 10 represents reply NAK or busy; 11 represents reply STALL or error.

Endpoint n transmitting length register (UEPn_T_LEN):

Bit	Name	Access	Description	Reset value
[7:0]	bUEPn_T_LEN	RW	Set the number of data bytes that USB endpoint n is ready to transmit (n=0/1/3/4)	xxh
	bUEP2_T_LEN		Set the number of data bytes that USB endpoint 2 is ready to transmit	00h

USB device physical port control register (UDEV_CTRL):

Bit	Name	Access	Description	Reset value
7	Reserved	RO	Reserved	0
6	bUD_RECV_DIS	RW	USB device physical port receiver disable bit. If this bit is 1, disable the receiver, and there is no static power consumption; if this bit is 0, enable the receiver and generate static power consumption	1
5	bUD_DP_PD_DIS	RW	USB device port DP pin internal pull-down resistor disable bit. If this bit is 1, disable the internal pull-down resistor; if this bit is 0, enable the internal pull-down resistor of DP	0
4	bUD_DM_PD_DIS	RW	USB device port DM pin internal pull-down resistor disable bit. If this bit is 1, disable the internal pull-down resistor; if this bit is 0, enable the internal pull-down resistor of DM	0
3	bUD_DIFF_IN	R0	Differential input status between the current DP and DM pins	x

2	bUD_LOW_SPEED	RW	USB device physical port low speed mode enable bit, if the bit is 1, select 1.5Mbps low speed mode; if the bit is 0, select 12Mbps full speed mode	0
1	bUD_GP_BIT	RW	Device common flag bit; the users can define it by their own, and reset or set by software	0
0	bUD_PORT_EN	RW	USB device physical port enable bit, if this bit is 1, it indicates that enable physical port; if this bit is 0, disable the physical port	0

USB endpoint 1, 4 mode control register (UEP4_1_MOD):

Bit	Name	Access	Description	Reset value
7	bUEP1_RX_EN	RW	The bit 0 represents disable receiving by endpoint 1; the bit 1 represents enable receiving by endpoint 1 (OUT)	0
6	bUEP1_TX_EN	RW	The bit 0 represents disable transmitting by endpoint 1; the bit 1 represents enable transmitting by endpoint 1 (IN)	0
5	Reserved	RO	Reserved	0
4	bUEP1_BUF_MOD	RW	Endpoint 1 data buffer mode control bit	0
3	bUEP4_RX_EN	R0	The bit 0 represents disable receiving by endpoint 4; the bit 1 represents enable receiving by endpoint 4 (OUT)	0
2	bUEP4_TX_EN	RW	The bit 0 represents disable transmitting by endpoint 4; the bit 1 represents enable transmitting by endpoint 4 (IN)	0
[1:0]	Power to Set Aside	RO	Power to Set Aside	00b

The data buffer modes of USB endpoints 0 and 4 are controlled by a combination of bUEP4_RX_EN and bUEP4_TX_EN, refer to the following table.

Table 16.3.2 Endpoint 0 and 4 Buffer Mode

bUEP4_RX_EN	bUEP4_TX_EN	Structure description: arrange from low to high with UEP0 DMA as the start address
0	0	Endpoint 0 single 64-byte transceiving shared buffers (IN and OUT)
1	0	Endpoint 0 single 64-byte transceiving shared buffers; endpoint 4 single 64-byte receiving buffers (OUT)
0	1	Endpoint 0 single 64-byte transceiving shared buffers; endpoint 4 single 64-byte transmitting buffers (IN)
1	1	Endpoint 0 single 64-byte transceiving shared buffers; endpoint 4 single 64-byte receiving buffers (OUT); endpoint 4 single 64-byte transmitting buffers (IN). All 192 bytes are arranged as follows: UEP0_DMA+0 address: endpoint 0 transceiver; UEP0_DMA+64 address: endpoint 4 receiving; UEP0_DMA+128: endpoint 4 transmitting

USB endpoint 2, 3 mode control register (UEP2_3_MOD):

Bit	Name	Access	Description	Reset value
7	bUEP3_RX_EN	RW	The bit 0 represents disable receiving by endpoint 3; the bit 1 represents enable receiving by endpoint 3 (OUT)	0
6	bUEP3_TX_EN	RW	The bit 0 represents disable transmitting by endpoint 3; the bit 1 represents enable transmitting by endpoint 3 (IN)	0
5	Reserved	RO	Reserved	0
4	bUEP3_BUF_MOD	RW	Endpoint 3 data buffer mode control bit	0
3	bUEP2_RX_EN	R0	The bit 0 represents disable receiving by endpoint 2; the bit 1 represents enable receiving by endpoint 2 (OUT)	0
2	bUEP2_TX_EN	RW	The bit 0 represents disable transmitting by endpoint 2; the bit 1 represents enable transmitting by endpoint 2 (IN)	0
1	Reserved	RO	Reserved	0
0	bUEP2_BUF_MOD	RW	Endpoint 2 data buffer mode contrast bit	0

The data buffer modes of USB endpoints 1, 2 and 3 are controlled by a combination of bUEPn_RX_EN, bUEPn_TX_EN and bUEPn_BUF_MOD(n=1/2/3) respectively, refer to the following table. In the double-64 byte buffer mode, the first 64 bytes buffer will be selected based on bUEP_*_TOG=0 and the last 64 bytes buffer will be selected based on bUEP_*_TOG=1 during USB data transmission to realize automatic switch.

Table 16.3.3 Endpoint n Buffer Mode (n=1/2/3)

bUEPn_RX_EN	bUEPn_TX_EN	bUEPn_BUF_MOD	Structure description: arrange from low to high with UEPn_DMA as the start address
0	0	x	Endpoint is disabled, and the UEPn_DMA buffer is not used
1	0	0	Single 64-byte receiving buffers (OUT)
1	0	1	Double 64-byte receiving buffers, selected by bUEP_R_TOG.
0	1	0	Single 64-byte transmitting buffers (IN)
0	1	1	Double 64-byte transmitting buffers, selected by bUEP_T_TOG.
1	1	0	Single 64-byte receiving buffers (OUT); single 64-byte transmitting buffers (IN)
1	1	1	Double 64-byte receiving buffer, selected by bUEP_R_TOG; double 64-byte transmitting buffer, selected by bUEP_T_TOG. All 256 bytes are arranged as follows: UEPn_DMA+0 address: endpoint receiving when bUEP_R_TOG=0; UEPn_DMA+64 address: endpoint receiving when bUEP_R_TOG=1; UEPn_DMA+128 address: endpoint transmitting when bUEP_T_TOG=0; UEPn_DMA+192 address: endpoint transmitting when bUEP_T_TOG=1

USB endpoint n buffer start address (UEPn_DMA)(n=0/1/2/3):

Bit	Name	Access	Description	Reset value
[7:0]	UEPn_DMA_H	RW	Endpoint n buffer start address higher byte, only the lower 4 bits are valid, and the higher 4 bits are fixed to be 0	0xh
[7:0]	UEPn_DMA_L	RW	Endpoint n buffer start address lower byte, only the higher 7 bits are valid, and the lowest bit is fixed to be 0, and only even addresses are supported	xxh

Note: the length of the buffer that receives data >= min (maximum data packet length possibly received + 2 bytes, 64 bytes)

17. LED Screen Interface

17.1 LED Control Card Interface

CH558 is equipped with an LED screen control card data transmission interface and built-in 4-level FIFO, which supports DMA and interrupts, saves CPU processing time and supports 1/2/4 data line interfaces.

Table 17.1.1 List of LED Screen Interface Related Registers

Name	Add:	Description	Reset value
LED_STAT	2880h	LED status register	010x 0000b
LED_CTRL	2881h	LED control register	0000 0010b
LED_FIFO_CN	2882h	FIFO counter status register (read-only)	0000 0000b
LED_DATA	2882h	LED data register (write-only)	xxxx xxxxb

LED_CK_SE	2883h	LED clock frequency division setting register	0001 0000b
LED_DMA_AH	2884h	DMA current buffer address higher byte	0000 xxxxb
LED_DMA_AL	2885h	DMA current buffer address low byte	xxxx xxx0b
LED_DMA	2884h	LED_DMA_AL and LED_DMA_AH form 16-bit SFR	0xxxh
LED_DMA_CN	2886h	LED DMA remaining counter register	xxxx xxxxb
LED_DMA_XH	2888h	DMA current auxiliary buffer address higher byte	0000 xxxxb
LED_DMA_XL	2889h	DMA current auxiliary buffer address lower byte	xxxx xxx0b
LED_DMA_X	2888h	LED_DMA_XL and LED_DMA_XH form 16-bit SFR	0xxxh
pLED_*	298*h	After bXIR_XSFR is set to 1, the name is used to address the above xSFR with pdata type, which is faster than xdata type addressing	

LED status register (LED_STAT):

Bit	Name	Access	Description	Reset value
7	bLED_IF_DMA_END	RW	DMA completion interrupt flag bit. If this bit is 1, there is an interrupt; if this bit is 0, there is no interrupt. Clear by writing 1 or clear when writing LED_DMA_CN	0
6	bLED_FIFO_EMPTY	RO	FIFO empty status indication bit. If it is 1, FIFO is empty	0
5	bLED_IF_FIFO_REQ	RW	If this bit is 1, it requests to write data interrupt flag bit to FIFO, and it is triggered by FIFO<=2; if this bit is 0, there is no interrupt. Write 1 to reset	0
4	bLED_CLOCK	R0	Current level of LED clock signal	x
3	Reserved	RO	Reserved	0
[2:0]	MASK_LED_FIFO_CNT	R0	LED FIFO current count	000b

LED control register (LED_CTRL):

Bit	Name	Access	Description	Reset value
7	bLED_CHAN_MOD1	RW	LED channel mode higher bit	0
6	bLED_CHAN_MOD0	RW	LED channel mode lower bit	0
5	bLED_IE_FIFO_REQ	RW	If this bit is 1, enable to request FIFO data interrupt; if this bit is 0, disable it	0
4	bLED_DMA_EN	RW	If this bit is 1, enable LED DMA and DMA interrupt; if this bit is 0, disable it	0
3	bLED_OUT_EN	RW	If this bit is 1, enable LED signal output; if this bit is 0, disable it	0
2	bLED_OUT_POLAR	RW	LED data output polarity control bit. If this bit is 0, output is enabled directly, and data 0 will output low level, and data 1 will output high level; if this bit is 1, reverse polarity output is enabled, data 0 will output high level, and data 1 will output low level	0
1	bLED_CLR_ALL	RW	If the bit is 1, empty LED interrupt flag and FIFO, which requires the software to reset	1
0	bLED_BIT_ORDER	RW	The bit sequence control bit of data byte. The first bit is sent through LED0. If this bit is 0, the LSB lower bit is the first; if this bit is 1, the MSB higher bit is the first	0

Table 16.1.2 LED Channel Mode

bLED_CHAN_MOD1	bLED_CHAN_MOD0	Description
0	0	Single channel data output: LED0
0	1	Dual-channel data output: LED0 and LED1
1	0	4-channel data output: LED0～LED3

		DMA only uses the main buffer and provides data to LED0～LED3 in sequence by byte
1	1	4-channel data output: LED0 and LED1 are grouped, LED2 and LED3 are grouped DMA uses the main buffer LED_DMA to provide data to LED0 and LED1, while using the auxiliary buffer LED_DMA_X to provide data to LED2 and LED3

FIFO count status register (LED_FIFO_CN):

Bit	Name	Access	Description	Reset value
[7:0]	LED_FIFO_CN	RO	Current number of data bytes in the FIFO. Only the lower 3 bits are valid, and the higher 5 bits are fixed to be 0	00h

LED data register (LED_DATA):

Bit	Name	Access	Description	Reset value
[7:0]	LED_DATA	WO	LED data port, used to write data into FIFO	xxh

LED clock frequency division setting register (LED_CK_SE):

Bit	Name	Access	Description	Reset value
[7:0]	LED_CK_SE	RW	Set the frequency division factor of LED output clock	10h

DMA current buffer address (LED_DMA):

Bit	Name	Access	Description	Reset value
[7:0]	LED_DMA_AH	RW	The initial value of higher bytes of the current DMA address can be preset, and it will increase automatically after DMA; only the lower 4 bits are valid, and the higher 4 bits are fixed to be 0	0xh
[7:0]	LED_DMA_AL	RW	The initial value of lower bytes of the current DMA address can be preset, and it will increase automatically after DMA; only the higher 7 bits are valid, and the lowest bit is fixed to be 0; only even addresses are supported	xxh

DMA current buffer address (LED_DMA_X):

Bit	Name	Access	Description	Reset value
[7:0]	LED_DMA_XH	RW	The initial value of higher bytes of the current DMA address in auxiliary buffer can be preset, and it will increase automatically after DMA; only the lower 4 bits are valid, and the higher 4 bits are fixed to be 0	0xh
[7:0]	LED_DMA_XL	RW	The initial value of lower bytes of the current DMA address in auxiliary buffer can be preset, and it will increase automatically after DMA; only the higher 7 bits are valid, and the lowest bit is fixed to be 0; only even addresses are supported	xxh

DMA remaining counter register (LED_DMA_CN):

Bit	Name	Access	Description	Reset value
[7:0]	LED_DMA_CN	RW	The current DMA remaining count in the LED_DMA main	00h

			buffer is in double bytes. The initial value can be preset, and it will automatically decrease after DMA operation. Not include the remaining count in auxiliary buffer LED_DMA_X	

17.2 LED Control Application

(1) Set LEDC and the necessary LED0～LED3 as output; Optionally, set the corresponding I/O drive capability;

(2) Set LED_CK_SE to select the LED output clock frequency;

(3) Set the DMA start address LED_DMA to point to the buffer that is ready to output data, that is, the main buffer;

(4) If LED channel mode 3 is selected, the auxiliary DMA starting address LED_DMA_X must be set to point to the auxiliary buffer;

(5) Set the LED control register LED_CTRL, select the channel mode, output polarity, bit sequence, enable interrupt and DMA. For example, LED_CTRL = bLED_CHAN_MOD0 | bLED_DMA_EN | bLED_OUT_EN;

(6) Set DMA count, start DMA transmission, or transmit data by writing to FIFO;

(7) Query or use interrupt processing to interrupt the corresponding status.

18. Parameters

18.1 Absolute Maximum Value (critical or exceeding the absolute maximum value will probably cause the chip to work improperly or even be damaged)

Symbol	Parameter description	Min.	Max.	Unit
TA	Ambient temperature during operation	-40	85	℃
TS	Ambient temperature during storage	-55	125	℃
VDD33	Internal working supply voltage (VCC33 is connected to the power, grounded)	-0.4	3.6	V
VIN5	External input power supply voltage (VIN5 is connected to power, grounded)	-0.4	5.6	V
VIO5	Support voltage on 5V withstand voltage input or output pin	-0.4	VIN5+0.4	V
VIO3	Not support voltage on 5V withstand voltage input or output pin	-0.4	VDD33+0.4	V

18.2 Electrical Parameters (Test conditions: TA=25℃, VIN5=5V or 3.3V, VDD33=3.3V, Fsys=12MHz)

Symbol	Parameter description		Min.	Typ.	Max.	Unit
VDD33	VDD33 pin internal working power supply voltage		2.85	3.3	3.6	V
VIN5	VIN5 pin external Input supply voltage	VDD33 only connected to the capacitor	3.6	5	5.5	V
		VDD33 short connected to VIN5	2.85	3.3	3.6	V
ICC	Total supply current during operation		4	8	50	mA
ISLP	Total supply current after total sleep			0.1	0.2	mA
VIL	Low level input voltage		-0.4		0.8	V
VIH	High level input voltage		2.0		VDD33+0.4	V
VOL	Low level output voltage (4mA sinking current)				0.4	V
VOH	High level output voltage (4mA output current)		VDD33-0.4			V
IIN	Input current at input end without pull-up resistor		-5	0	5	uA
IUP	Input current at the input terminal with the built-in pull-up resistor		20	40	80	uA
IDN	Input current at the input terminal with the built-in pull-down resistor		-20	-40	-80	uA

IUPX	Input current at the input terminal with the built-in pull-up resistor during the turnover from low to high	200	300	500	uA
Vpot	Threshold voltage of power on reset of power supply	2.4	2.55	2.7	V

Note: All pull-up currents are drawn to the VDD33 voltage, not the VIN5 voltage.

18.3 Timing Parameters (Test Conditions: TA=25°C, VIN5=5V or 3.3V, VDD33=3.3V, Fsys=12MHz)

Symbol	Parameter description	Min.	Typ.	Max.	Unit
Fxt	External crystal frequency or XI input clock frequency	4	12	20	MHz
Fosc	Internal clock frequency after calibration	11.82	12	12.18	MHz
Fpll	PLL frequency after frequency multiplication	24	288	350	MHz
Fusb4x	USB sampling clock frequency when using USB function	47.04	48	48.96	MHz
Fsys	System dominant frequency clock frequency (VDD33>=3V)	1	12	56	MHz
	System dominant frequency clock frequency (VDD33<3V)	1	12	50	MHz
Tpor	Power on reset delay of power supply	15	17	20	mS
Trst	Width of the input effective reset signal from the outside of RST	70	100	200	nS
Trdl	Thermal reset delay	35	60	100	uS
Twdc	Watchdog overflow cycle/computational formula for timing cycle	262144 * (0x100 - WDOG_COUNT) / Fsys			
Tusp	Detect the automatic USB suspension time	4	5	6	mS
Twak	Wake-up completion time after chip sleep	1	40	100	uS

19. Revision History

Version	Date	Description
V1.0	December 24, 2014	First release
V1.1	August 21, 2015	Update: 1, 4, 12.5.2, 14.4, 16.3, 17, 18.3
V1.2	July 27, 2016	Update: 12.5
V1.3	January 18, 2017	Update: 2, 6.7, 14.4.2
V1.4	November 16, 2017	Update: RCAP2H in Table 5.1, Table 6.7.1